www.amateaudio.com

Great sound
from Barcelona
since 1972

User's manual

X10FD

XCELLENCE

March 2026

Amate Audio S.L.

EXPORT & CUSTOMER SERVICE
Perpinyà, 25 · Polígon Industrial Nord
08226 Terrassa · Barcelona – SPAIN
T. +34 93 735 65 65
export@amateaudio.com

R&D, FACTORY AND MANAGEMENT
Violinista Vellsolà, 18
08222 Terrassa · Barcelona – SPAIN
T. +34 93 736 23 90
info@amateaudio.com

Safety Instructions

1. All safety instructions must be read before using this device.

2. The exclamation mark in the triangle indicates internal components which if replaced can affect safety.

3. The lightning symbol within the triangle indicates the presence of dangerous uninsulated voltages.

4. This device must not be exposed to rain or humidity. It must not be used for example near swimming pools, fountains or any other place where it might be affected by liquids.

5. Only clean the device with a dry cloth.

6. Do not situate the equipment where its ventilation system might be interfered with.

7. Do not install the device near heat sources such as radiators, heaters or other heat-emitting elements.

8. The equipment must be repaired by qualified technical service personnel when:

A. The mains supply cable is damaged, or
B. Any object or liquid has damaged the device; or
C. The equipment does not function normally or correctly; or
D. The equipment has been exposed to the rain; or
E. The chassis is damaged

9. Disconnect the device in the case of electric storms or during long periods of disuse.

10. Never hang the equipment by its handle.

11. Only use manufacturer recommended accessories.

1. INTRODUCTION

1.1. General product information

Amate Audio thanks you for the trust placed in our Xcellence loudspeaker systems. The Xcellence series combines the convenience of a self-powered system and the flexibility of the DSP (digital system processing) for cabinet control. More than 50 years' experience in amplifier and acoustic cabinet design using the highest technology and components come together to give you a product ideal for a multitude of applications, especially those which require high levels of sound pressure. Stadiums, theatres or big events will become the perfect places for their use. We suggest you read the following information with attention, assured that it will be of maximum use in helping you to achieve the best results and optimum performance.

1.2. Features and presentation

X10FD

- Self-powered two-way acoustic system
- XLR electronically balanced input & XLR parallel link
- AC PowerCon input & link
- EtherCon RJ45 input & link
- 1 Gbps Ethernet connectivity with DanteTM audio networking
- 800W class D amplifier for mid-bass range
- 200W class D amplifier for high range
- 24-bit AD/DA converters with 112 dB dynamic input, 48 kHz sampling rate
- DSP Controls (presets, parametric EQs, delay, mute, volume and limiter)
- Amplifier self-diagnostics: input level, temperature, limiter active
- Overvoltage protection (>250V-400V)
- Ethernet connectivity with Dante^{TM} audio networking
- 10" neodymium woofers with 3" voice coil
- 1.7" HT polymer diaphragm neodymium driver
- 50º to 100º (H) x 55º (V) asymmetrical dispersion horn

2. X10FD FEATURES

The X10FD cabinet is ideal for a multitude of applications. It includes 800 W bi-amplification for the low range woofer, 200 W for the high range compression driver and digital signal control by DSP. The manufacturer presets make it easy, flexible and user-friendly. The result is a clean, high quality sound whether for nearfield listening or at full power in larger sites.

2.1. Technical description

The X10FD cabinet comes with DSP control and full range sound delivery thanks to its direct radiation transducer and acoustic bass reflex cabinet. As a full range system, its response is 53Hz-19kHz (-10dB).

It has 1000W continuous amplification (800W + 200W), thermal protection, output short circuit protection, independent peak and RMS power limiters for each channel, and protection against overvoltage. The DSP includes several presets which can be selected either accessing the cabinet's rear control panel or via the computer with Ethernet connection.

The X10FD cabinet is connected using the XLR balanced connector. Mains supply is through PowerCon. It is built in birch plywood, which has a high resistance to vibrations and humidity with black Polyurea paint coating. The front face is protected by a 1.5 mm thick steel grille with acoustically transparent grey cloth. It includes an in-built back handle for an easy and comfortable transport.

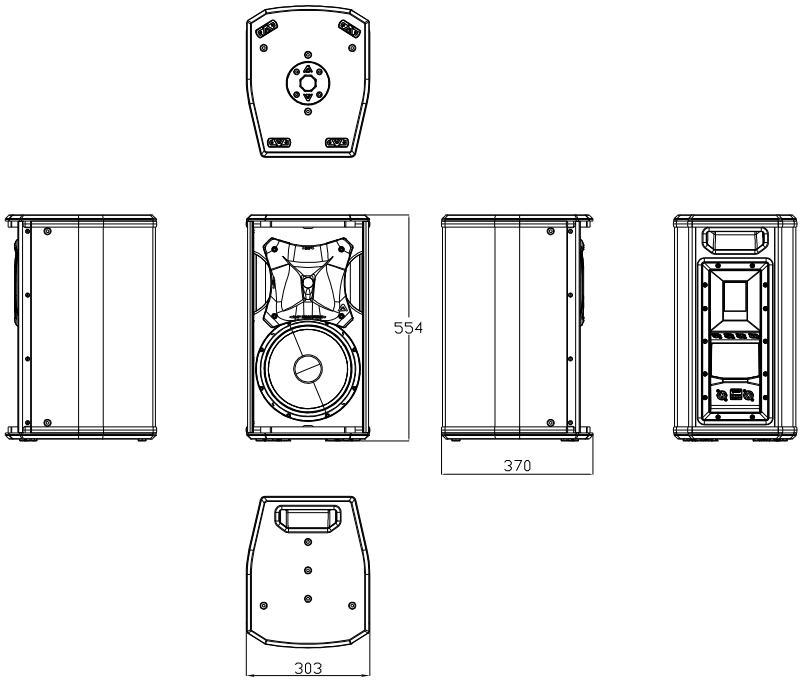

Fig. 1. X82FD external dimensions

3. PRESETS

The X10FD includes several manufacturer presets for different types of application. The DSP system can also store up to 24 other presets, depending on user requirements.

<u>PRESET 1:</u> FR Flat

Single enclosure without subwoofer,
full range, flat response.

[FR Flat]

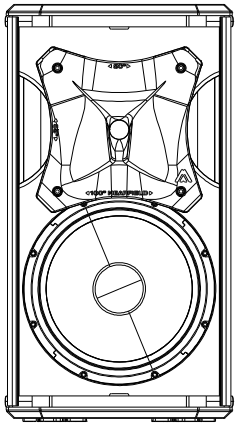

Fig. 2. Preset [FR Flat] configuration

<u>PRESET 2:</u> FR Nearfield
Single enclosure, without subwoofer, less performance at high frequency range, recommended for indoors application.

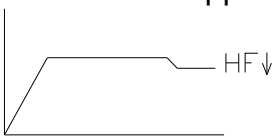

[FR Nfield]

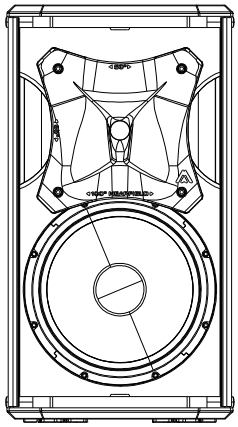

Fig. 3. Preset [FR NField] configuration

<u>PRESET 3:</u> Speech
Single enclosure, without subwoofer. For applications using microphone

[Speech]

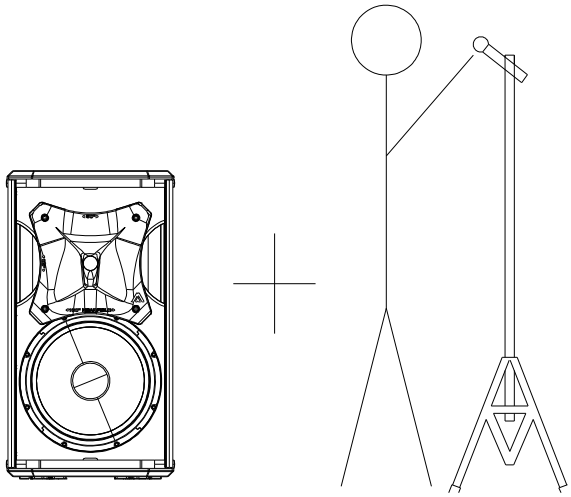

Fig. 4. Preset [Speech] configuration

<u>PRESET 4:</u> HPF90 Flat
Single enclosure with subwoofer, with HPF90 Hz, flat response.
Use [X-ALIGNED] on XW118 subwoofer, XW215 subwoofer or XW218 subwoofer.

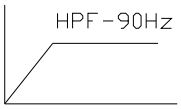

[X-ALIGNED]

[HPF90 Flat]

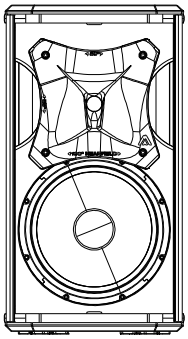

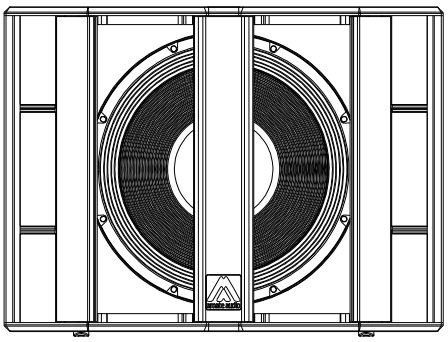

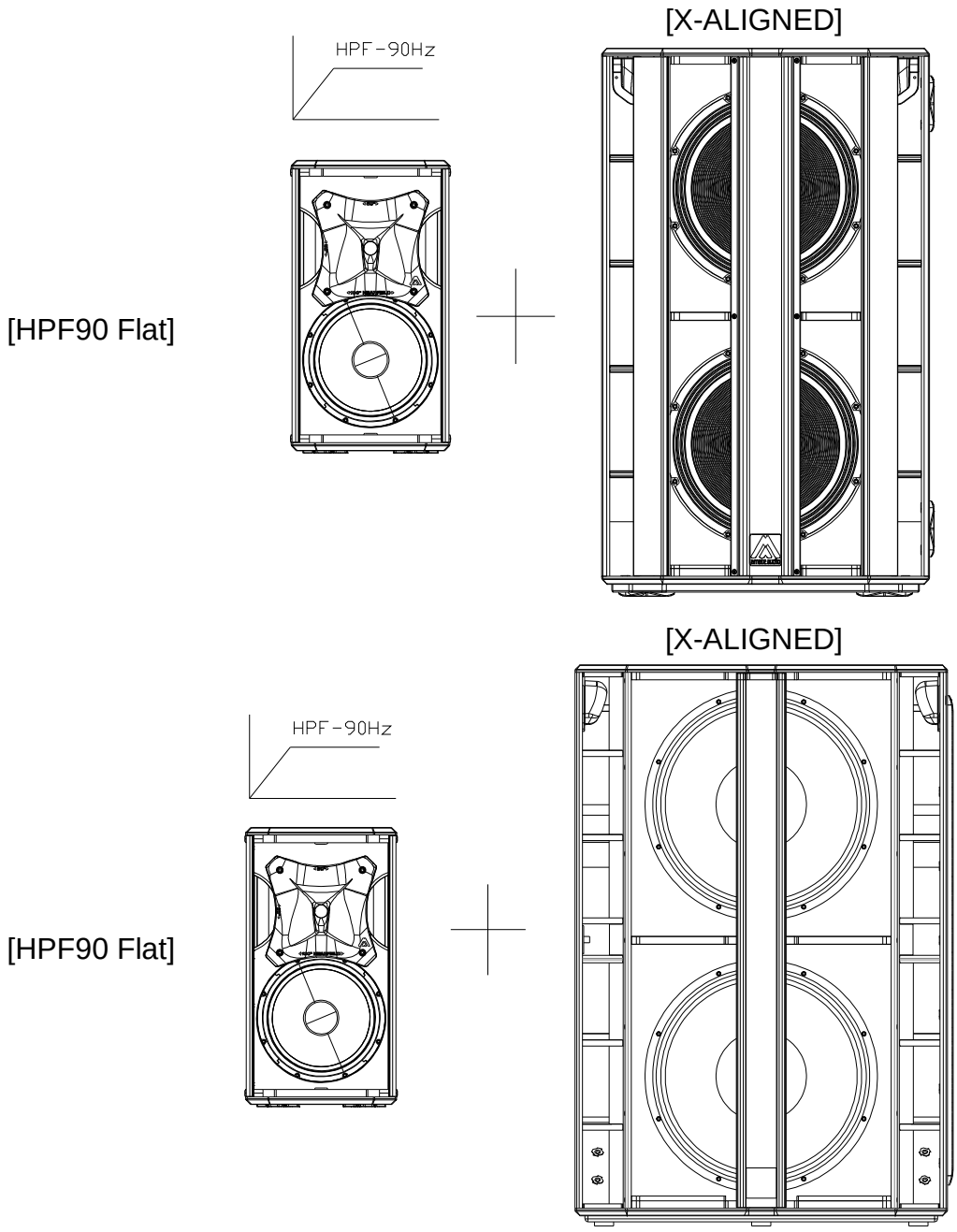

Fig. 5. Preset [HPF90 Flat] configuration

<u>PRESET 5:</u> HPF90 Nearfield
Single enclosure with subwoofer, with HPF90 Hz, less performance at high frequency range than [HPF90 Flat], recommended for indoors application. Use [X-ALIGNED] on XW118 subwoofer, XW215 subwoofer or XW218 subwoofer.

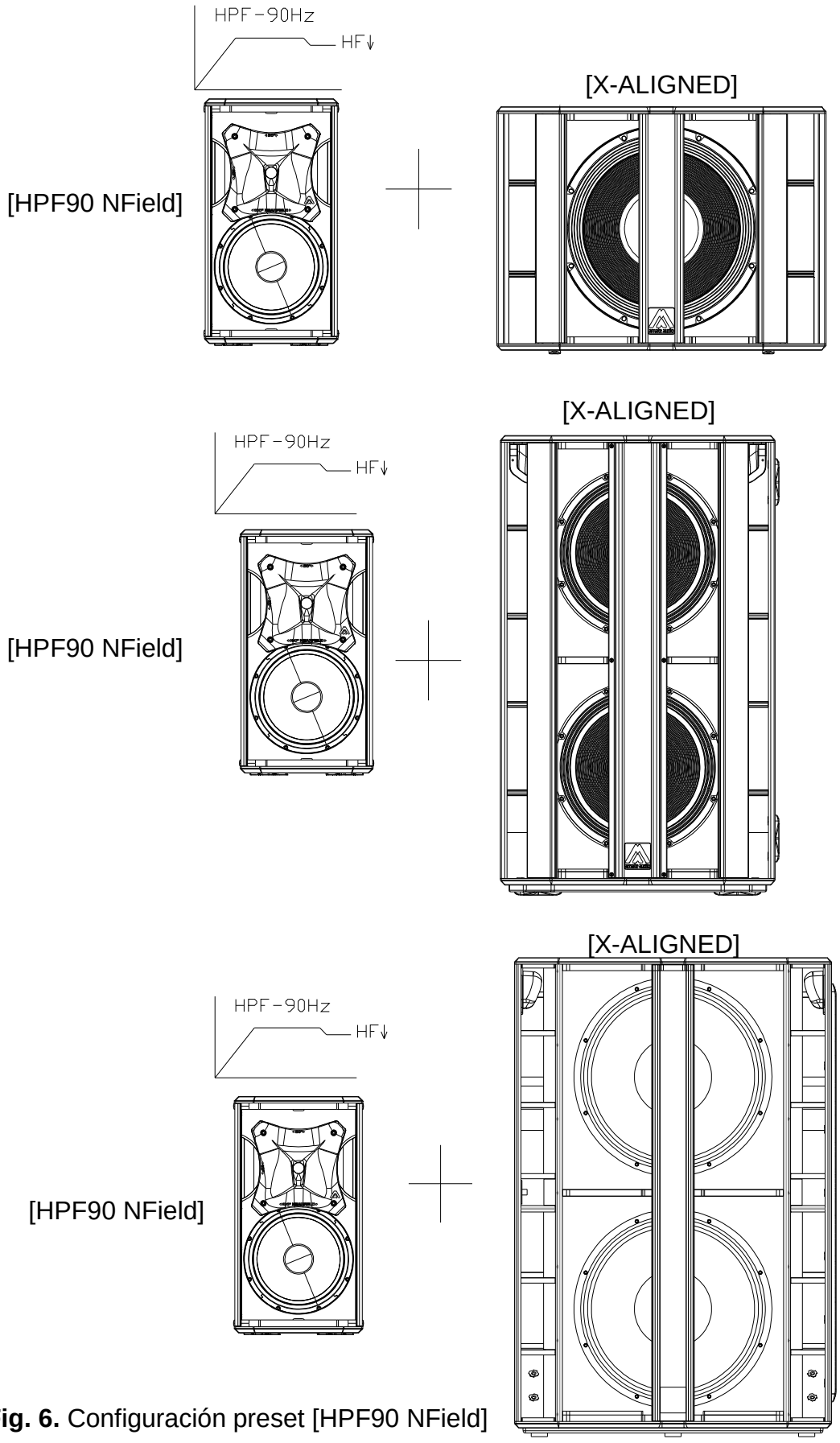

Fig. 6. Configuración preset [HPF90 NField]

SYSTEM ALIGNMENT
The system is pre-aligned from the factory. Do not forget to add the geometric delay depending on the configuration used.

4. CONTROL AND CONNECTION PANEL

The X10FD control panel contains the following elements:

A) TOUCHSCREEN: Displays information about the System status: current preset, network IP, amplifier temperature and signal input level. Allows the user to configure the system without the need of an external computer: IP address setting, Preset selection, Delay, Gain, Limiter, ECO mode on/off, Signal LEDs on/off, etc. For more information about the available functionality, read the Annex I of this manual.
NOTE: The default PIN to access the setup menu is “1234”

B) AC INPUT/OVERVOLTAGE PROTECTION: These LEDS show the status of the AC mains supply.

- **POWER ON:** (Blue) when lit, the equipment is ON and the AC input level is within the permitted range (up to 250 VAC).
- **>250V:** (Red) when activated, the AC voltage is permanently out of the permitted range of the equipment, so it will remain under protection until this condition is solved. Revise your connections and mains power installation and consider that other equipment connected to this line may have been damaged.

C) NETWORK: Two 8-pin RJ45 / EtherCon® compatible connectors for connection to Ethernet network up to 1Gbps. This connection can be used for remote control via software (DSPStudio) and for streaming audio via Dante™. Please refer to Amate Audio DSPStudio Quick Installation Guide for more information on remote connection. The two connectors are interconnected by means of an internal switch, so they can be used interchangeably and allow the chain connection of several boxes.
IMPORTANT: If Dante is used it is not recommended to chain more than eight units, due to latency reasons.

D) BALANCED INPUT/LINK:
XLR-3 Female balanced signal connector for signal input.
XLR-3 Male connector for parallel connection of various cabinets with the same input signal.
Nominal Input sensitivity: +8dBu (2 Vrms)
Maximum Input Voltage without input compression: +14dBu (4Vrms)
Maximum Input Voltage without clipping: +20dBu (8Vrms)
IMPORTANT: Please always use balanced microphone cable with the following pin assignment: 1= Shield (Ground) 2= Live (+) 3= Return (-)

E) AC MAINS INPUT/LINK: Mains supply connection via PowerCon.

- Blue connector for AC in.
- Grey connector to feed other units in parallel. Linking up to eight units is possible, provided that a quality cable of a minimum section of 3x2.5mm^2 is

used. Connecting more than eight units in parallel may lead to a voltage drop in the cable that will reduce the equipment performance.

Always use mains power cable supplied by manufacturer.
Never connect the Xcellence cabinets to an unearthed mains supply or by using an unearthed mains cable.

Fig. 7. Panel de control y conexiones de la X10FD

5. CONNECTING

5.1. Parallel connection

Analog Audio Signal

Connect the signal (mixing desk output) to INPUT on the first unit. Use the LINK output to transfer the INPUT signal to the second unit and thus sequentially for further units. All of the units in this chain must be switched on.

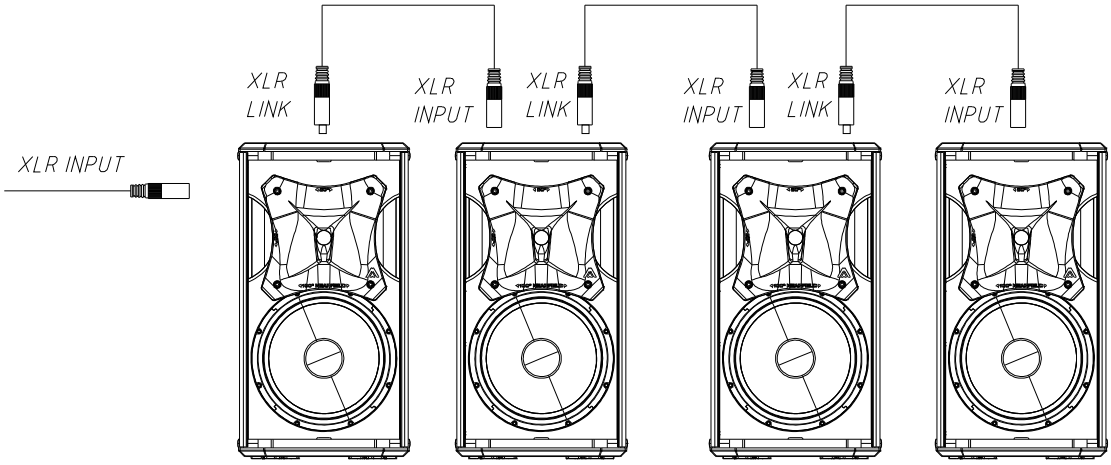

Fig. 8. Parallel connection for the X10FD (signal)

Mains Power

For the mains connection in parallel use the cable with grey Neutrik PowerCon NAC3FCB at one end and the blue Neutrik PowerCon NAC3FCA at the other end.

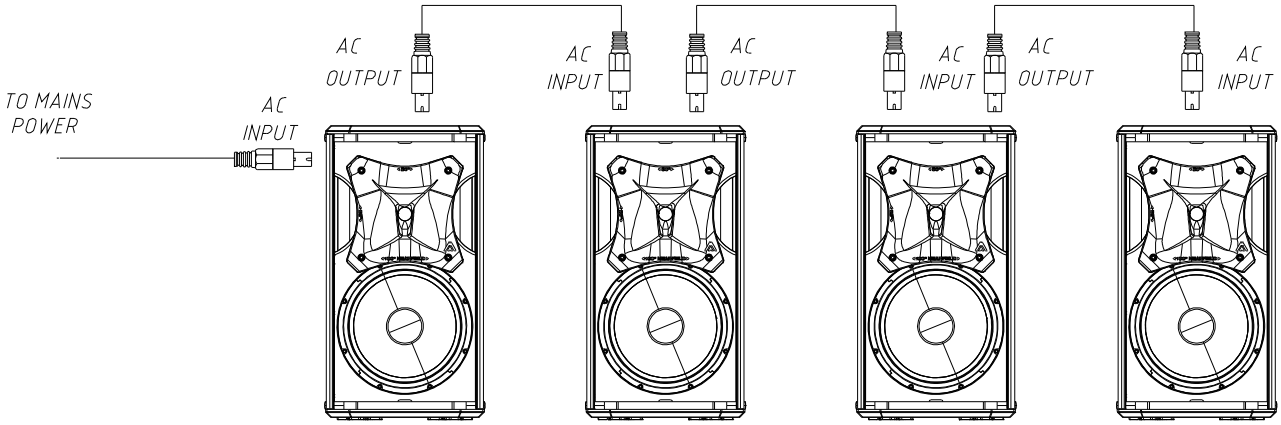

Fig. 9. Parallel connection for the X10FD (mains). You can link up to eight units

Do not connect more than eight X10FD units using the AC Mains link connector. Do not connect Xcellence series units in parallel using PowerCon-PowerCon without earth.

Network

The two available Ethernet ports via the EtherCon RJ-45 connector are internally switched and both can be used as input and link to other cabinets. All of the units in this chain must be switched on.

The number of units allowed in parallel or daisy-chain depend on whether Dante audio networking is being used.

When using Dante, a maximum number of 8 cabinets is recommended due to latency reasons. When not, there is no specific limit for daisy-chaining (control and monitoring using DSPStudio®).

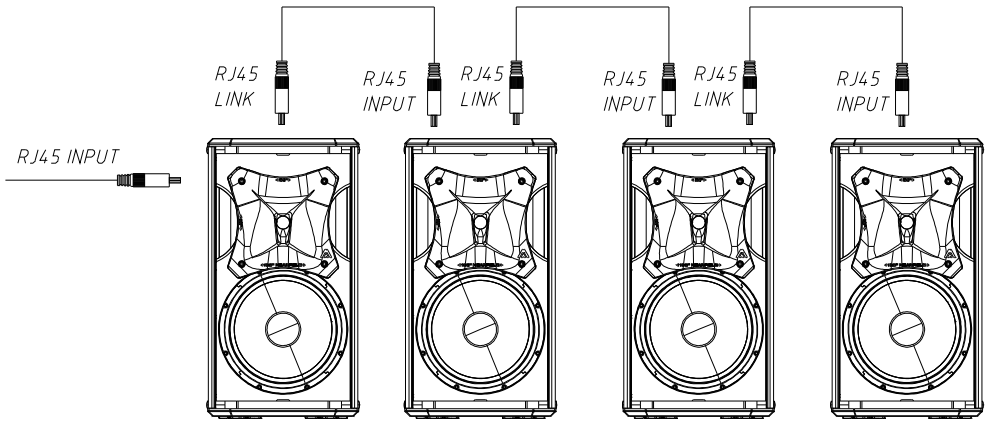

Fig.10. Parallel connection for the X10FD (network). You can link up to eight units when using Dante networking, or more when not using it.

5.2. Parallel connection with subwoofer

You can connect the X10FD in parallel with the XW118, XW215 and XW218 subwoofers.

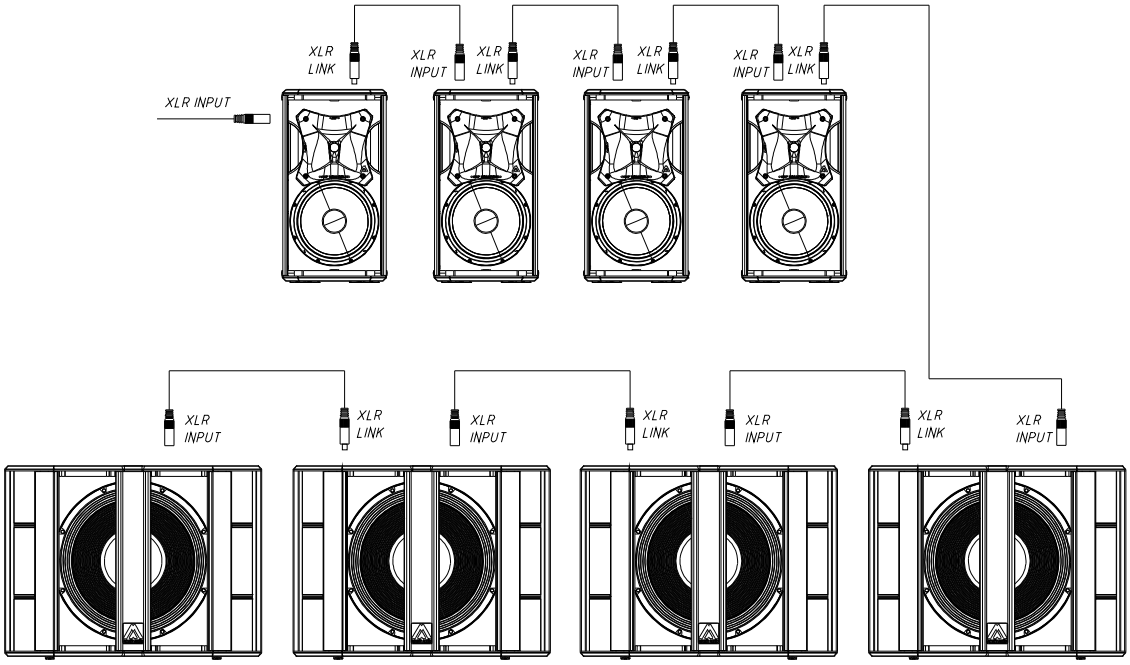

Fig. 11. Parallel connection for the X10FD and XW118 (signal). Use the same parameters for XW215 and XW218.

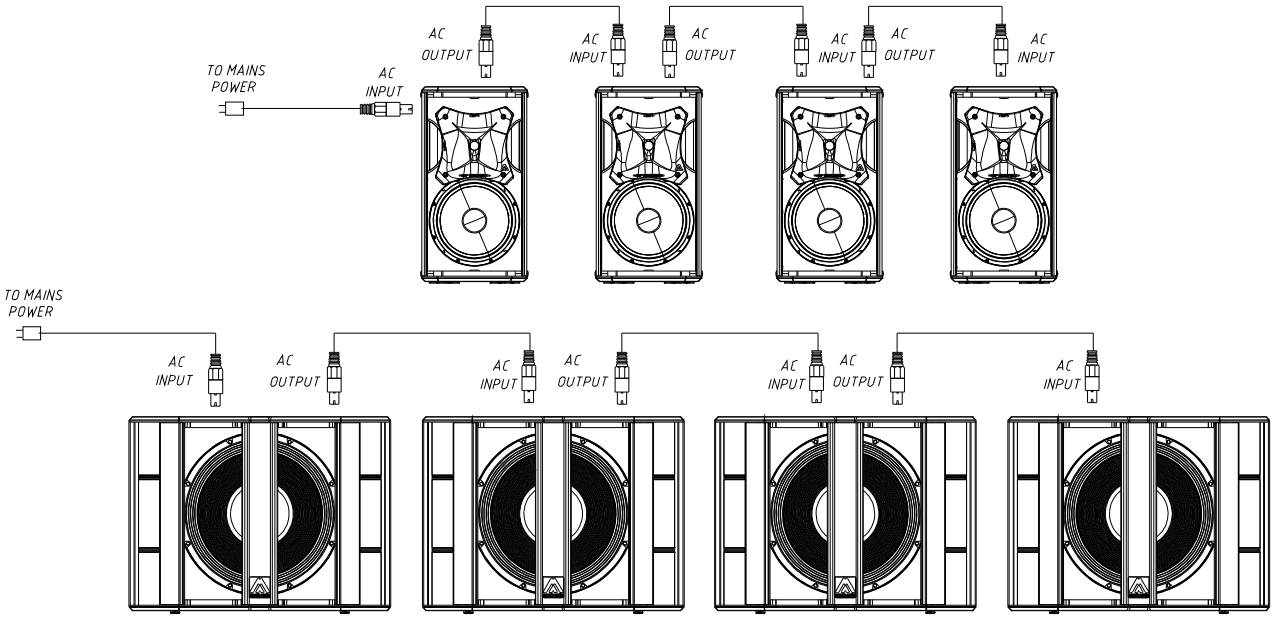

Fig. 12. Parallel connection for the X10FD and XW118 (mains). Do not connect more than eight units of X10FD, four units of XW118 or four units of XW215 using the AC Mains link connector. In case you are using the XW218, do not connect more than two units.

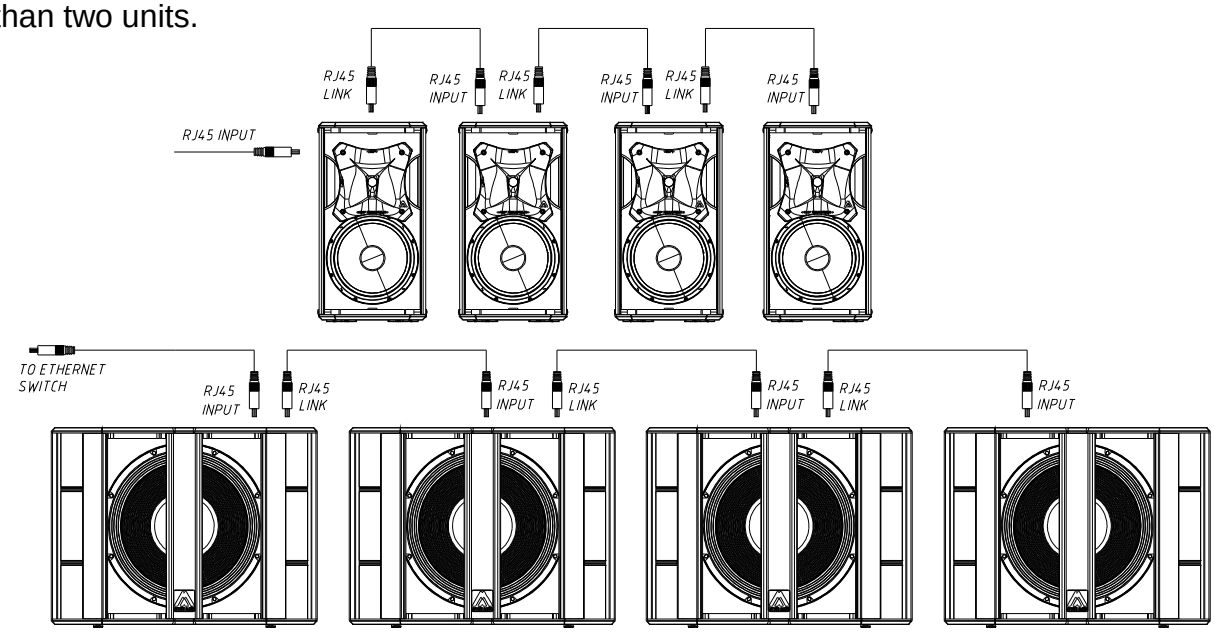

Fig.13. Parallel connection for the X10FD and XW118 (network). Do not daisy-chain more than eight units of each when using Dante networking. Use the same parameters for XW215 and XW218.

6. OVERVOLTAGE PROTECTION

The active Xcellence series models incorporate an exclusive protection by Amate Audio against mains voltage overload and other related problems (loss of neutral, connection between phases, etc). In the mains input an electronic circuit compares the input voltage with a reference value. When the input exceeds 250 Volts, the

circuit reacts by blocking the input tension until it returns to its correct limits (230V +/- 10%). When the “>250V” LED lights up red, the unit stops running, until the correct voltage is re-established.

Generally the cause of such an anomaly tends to be a neutral voltage drop or incorrect connection of the equipment to 400V supply. Whenever the overvoltage LED lights up, check the tension of the electrical phases: other devices in the sound system are also at risk of electrical fault and severe damage.

7. MOUNTING AND INSTALLATION

Flying an X10FD system is easy, fast and secure. To perform any operations related to flying the system, read the present document, and act on the warnings and advice given. Only experienced installers with adequate knowledge of the system and local safety regulations should fly speaker cabinets.

It is the user's responsibility to ensure that the systems to be flown and the flying accessories (such as chains, eyebolts, lock pins...) comply with state and local regulations. They should be regularly inspected and replaced if in doubt. When flying enclosures from ceiling support structures, extreme care should be taken to assure the load bearing capabilities of the structures. **Do not fly systems from unsafe structures.** All flying accessories that are not supplied by Amate Audio are the user's responsibility. Use at your own risk. **Remember that no risks should be taken with regards to public safety.**

7.1. Placement

When possible, cabinets should be located in a high position, slightly inclined to the audience. If the loudspeakers are located too low, the listeners at the end of the room will not hear a good sound quality.

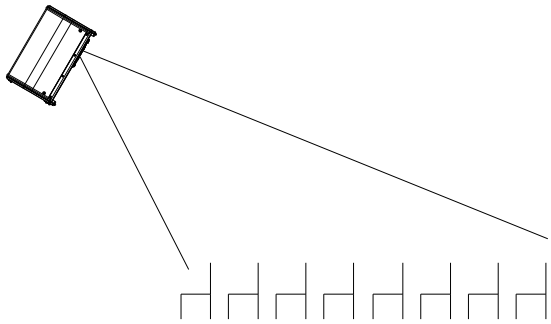

Fig. 14. Flying placement

7.2. X10FD with subwoofer

The X10FD is equipped with a 35 mm socket for mounting the speaker on a subwoofer (use SP/CRTL bar) or in tripod. Be careful not to use this system on non-flat surfaces as it may become unstable. The X10FD may be used with XW118 XW215 and XW218 subwoofers (both in stacking application or flying application).

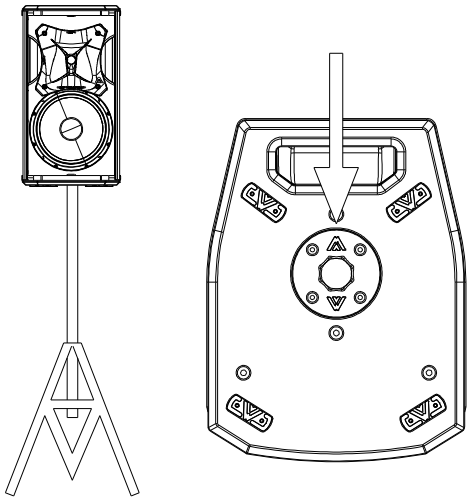

Fig. 15. X10FD 35mm bottom socket

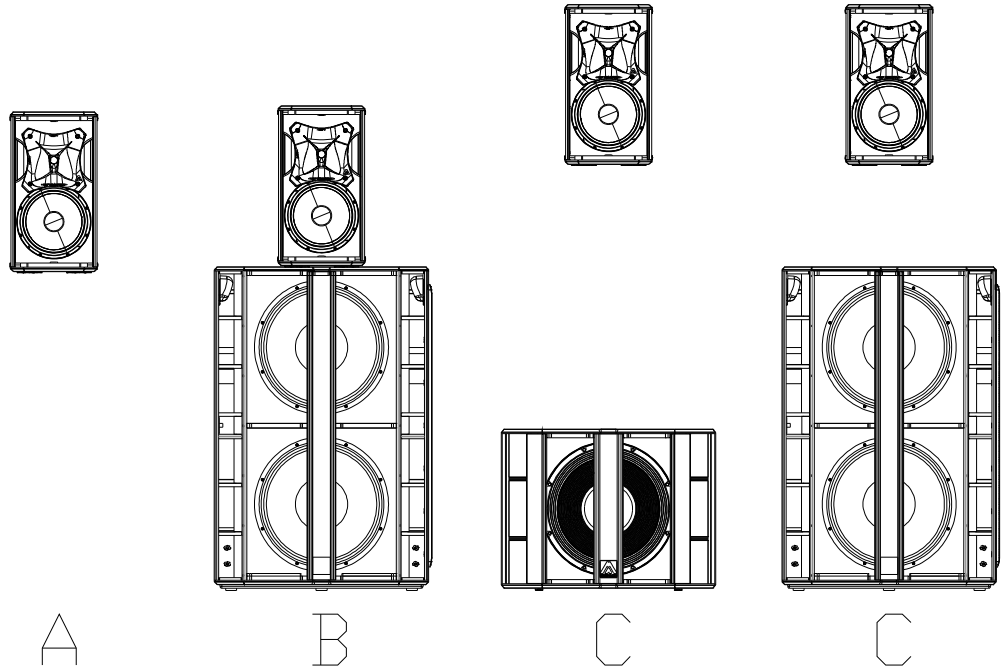

Fig. 16. X10FD with subwoofer (A: with pole, B: stacked, C: flown)

7.3. Asymmetrical and rotatable horns

The X10FD incorporates an asymmetrical dispersion horn, which will optimise coverage.

To rotate the horn, unscrew the frontal grille, and then, unscrew the four fixing screws of the horn. Rotate it 180 degrees taking care of the wires. Screw the horn again and finally place the frontal grille in its right position.

Good coverage of audiences often is a conflicting combination of:

- wide coverage for the closest audience (short throw)
- narrow coverage for distant areas (long throw)

The asymmetrical dispersion horn coverage varies from "short throw" to "long throw" along the vertical axis (keeping a constant vertical directivity). In conclusion, directivity feature of (50º to 100º(H), 55º(V)) can be seen as if the horn itself had "two" horizontal directivities, which depend on the distance. For short distances the horn should be used with its "wide" dispersion (100º). For long distances the horn should be used with its "narrow" dispersion (50º). We suggest you to pay attention to the following examples.

7.3.1. Vertical-Positioned Cabinets (Flown and aiming to the audience)

We need wide coverage (100º) for the closest listeners and narrow coverage for the distant audience.

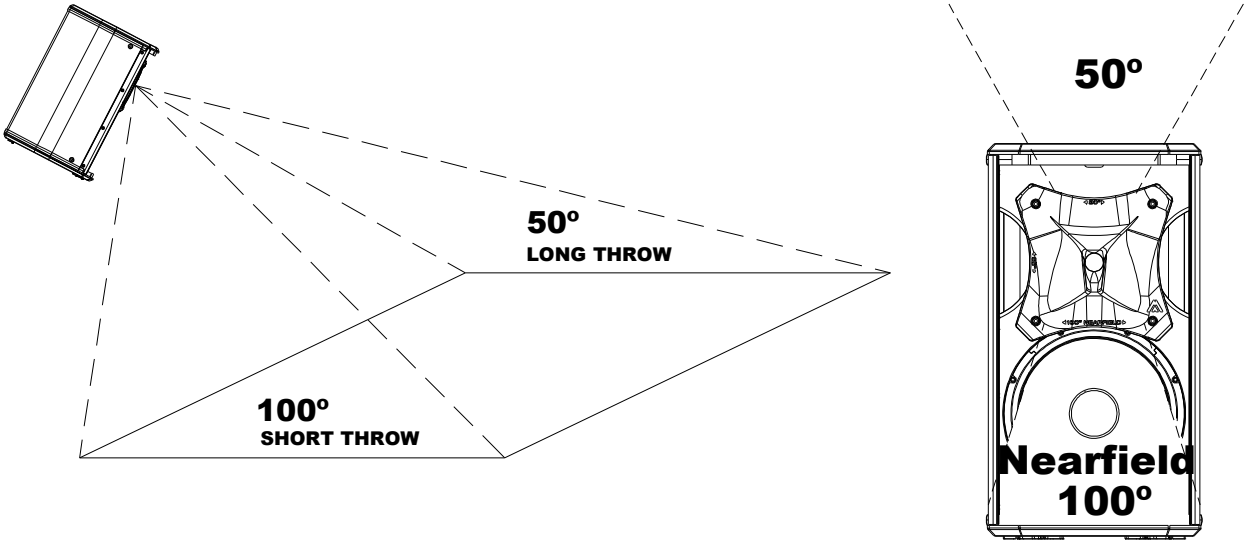

Fig. 17. Vertical position

7.3.2. Horizontal-Positioned Cabinets (Flown and aiming to the audience)

We need wide coverage (100º) for the closest listeners and narrow coverage for the distant audience

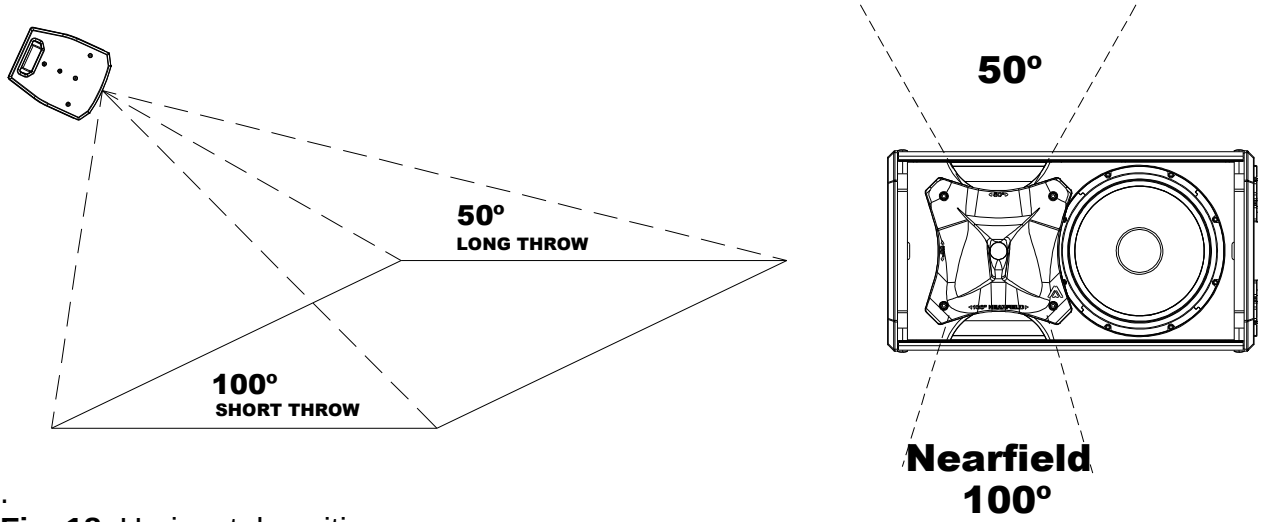

.

Fig. 18. Horizontal position

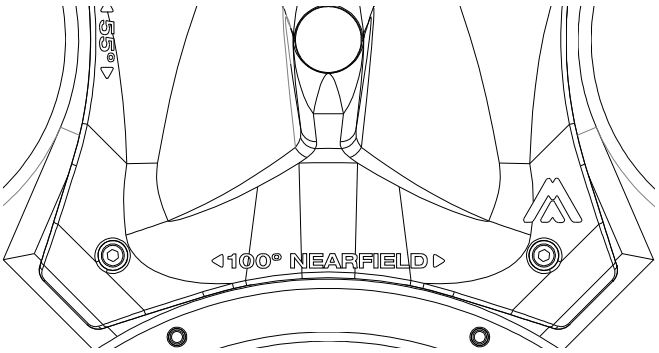

The horns have the "Nearfield" mark printed on the 100º horizontal coverage side.

Fig. 19. “Near field” logo

8. MOUNTING ACCESSORIES

8.1. ACRM8

The X10FD provides several M8 flying points. Their correct use will permit the flying in horizontal or vertical position.

Horizontal flying	4&6 or 5&7 (front rigging points) 3&6 (back tilt points)
Vertical flying	1&2 (front rigging points) 3&8 (back rigging points)

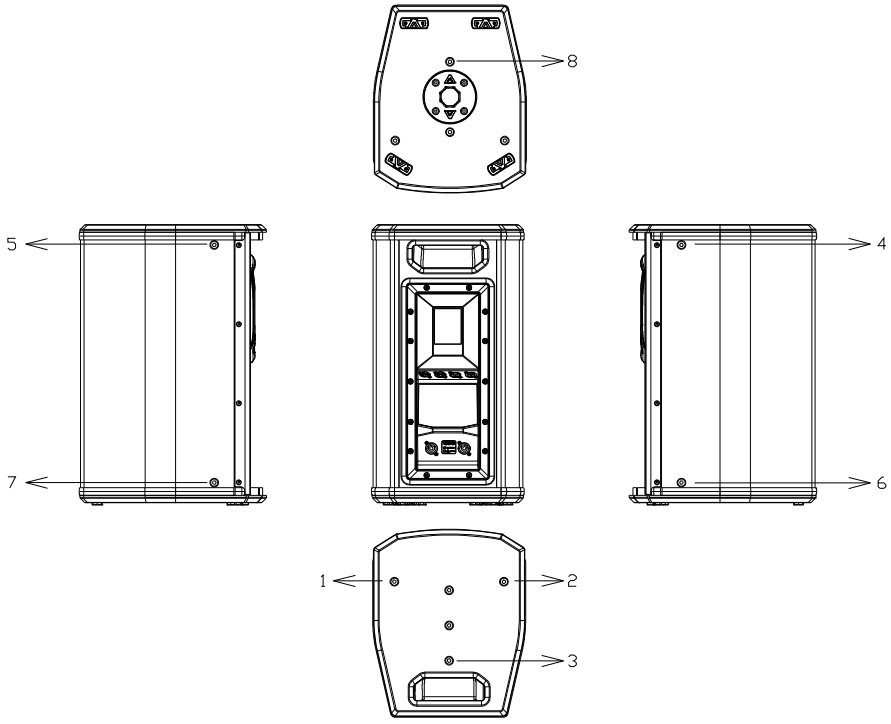

Fig. 20. X10FD horizontal and vertical flying points

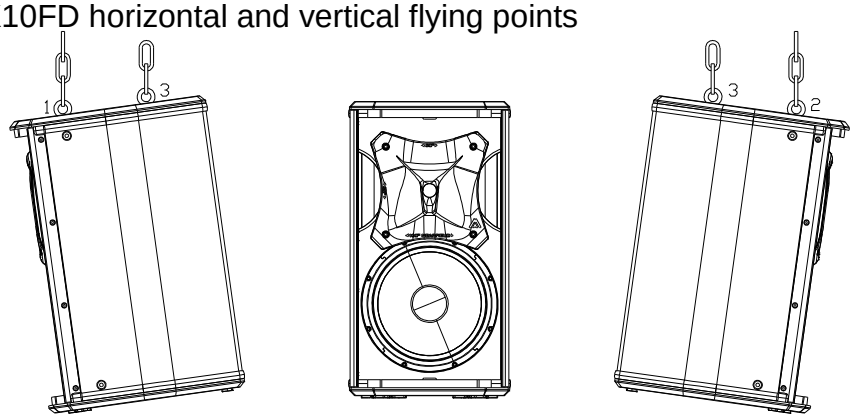

Fig. 21. X10FD vertical flying

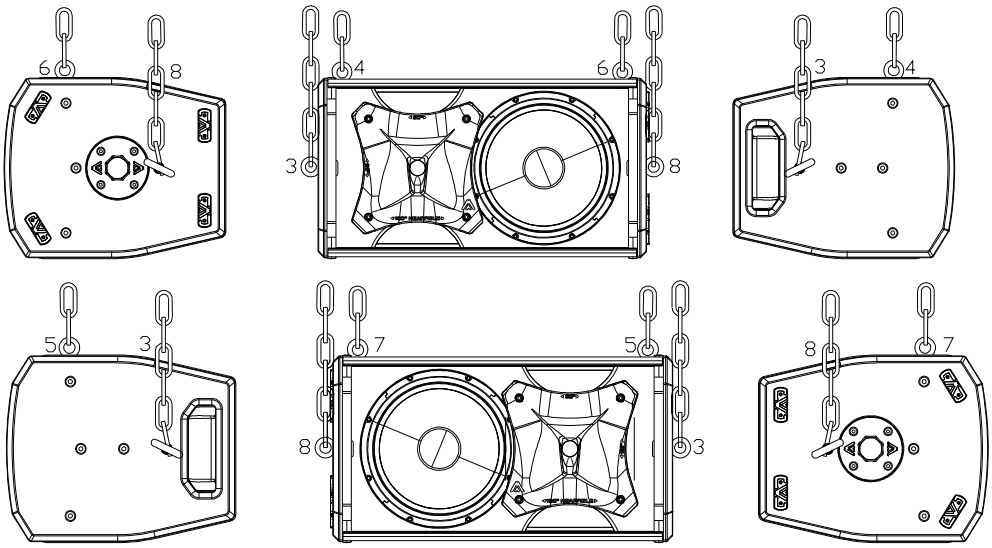

Fig. 22. X10FD horizontal flying

8.2. RB-S and RB-S/GT

The RB-S and RB-S/GT are two optional accessories for flying one X10FD (vertical orientation) (see “RB-S and RB-S/GT user’s manual” for more information).

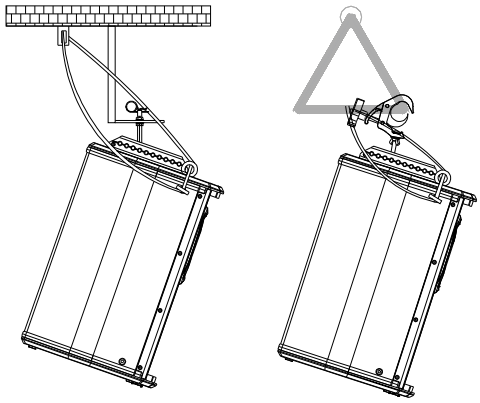

Fig. 23. Flying of one unit X10FD with RB-S and RB-S/GT

8.3. SP-WHR

The SP-WHR is an optional accessory for hanging one X10FD on wall (vertical orientation) (see “SP-WHR user’s manual” for more information).

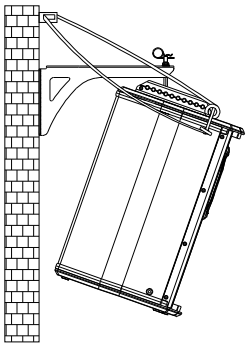

Fig. 24. Flying of one unit X10FD with SP-WHR

8.4. Horizontal flying with UB-L

The UB-L is an optional accessory for mounting on wall (horizontal orientation) one unit of X10FD. Refer to “UB-L instructions manual” for more information.

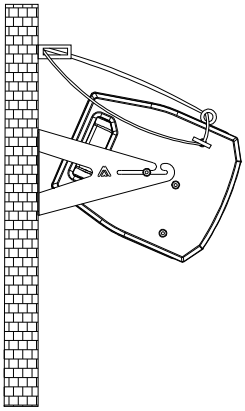

Fig. 25. U-BL bracket for X10FD

9. TROUBLESHOOTING

System not powering up

- Check the Overvoltage Protection leds
  - No LED lit: Check if voltage is arriving to the PowerCon socket, and if mains cable is in good condition. If yes, the overvoltage circuit may be damaged. Contact support.
  - Red (>250V). Voltage arriving to the PowerCon socket is above 250VAC. Check the mains voltage is in the rated limits (230VAC +/-10%). If mains voltage is OK, the overvoltage circuit may be damaged. Contact support.
  - Blue (Power On): Overvoltage circuit is functioning properly. If none of the Status LEDs or the touchscreen are being lit, the fuse in the power module may be blown. The replacement of this fuse must be carried out by specialized personnel as it is an internal component of the amplifier module.

No output sound

- Check with the indicators (Signal Present LED & Touchscreen) that the signal is being received by the system.
- Check that the signal cables are in good condition and connected at both ends
- The mixer output level must not be at minimum.
- Check that the mixer channel is not muted.
- Check that the system is not in MUTE or STANDBY (MUTE LED or STANDBY LED) not lit. If yes, go inside the menu using the touchscreen and deactivate them:
  - To disable the Standby go to SETUP and select STANDBY OFF.
  - To disable the MUTE go to AUDIO, GAIN and push the icon with a loudspeaker.
- Check that the system GAIN is not set to the minimum. To do that, go to the AUDIO setting using the touchscreen, select GAIN and move the slider to the 0dB position.

Distorted output signal

- The system is being saturated with a very high input signal, frequently caused by the same mixer. Check the output level or mixer gain channels.

Poor bass levels

- Check the polarity on the signal connections between the mixer and cabinets. If any of the Pins (1, 2 or 3) have been inverted at the cable ends, this will cause significant performance and sound quality loss.

Noise and Hum

- Check that all the connections to the active units are in good condition.
- Avoid intertwining between mains supply cables or proximity to transformers or Electromagnetic (EMI) emitting devices.
- Check there is no light intensity regulator in the same AC circuit as the unit. ALWAYS connect the sound and light circuits in different phases.
- Check that there is a proper connection to EARTH in the electrical installation.

Forgotten PIN for Touchscreen

- The default PIN is “1234”.
- Should you have changed the PIN and forgotten it, follow these steps:
  - Turn the system off.
  - Turn the system on.
  - When the display shows the word "Initializing", press anywhere on the touch screen during at least 5 seconds.
  - The PIN will be restored to its default value "1234".

10. TECHNICAL FEATURES

	X10FD
Analog Audio Input	
Sensitivity	+8dBu – 1.94V
Impedance	20kΩ balanced
Audio Network Input	
Type	Dante™ Audio Networking
Channels	1 channel @ 48kHz
Mains Supply	
Type	Univ. switch mode power supply
Nominal input	85-265 VAC/45-65 Hz
Average current draw	2.2 A
AD/DA converters	24 bit / 48 kHz – SNR > 112 dB
DSP architecture	64 bit
Frequency response (-10 dB)	53Hz-19kHz
Maximum output level (1m/continuous)	128 dB
Amplifier (program)	800+200W
Nominal directivity (-6dB)	50º to 100º (H) x 55º (V)
Components	
LF	2 x 8” neodymium woofers (2” long excursion dual voice coil)
HF	1 x 3” titanium diaphragm neodymium driver
Cabinet	
Type	Bass-reflex
Height	624 mm
Width	303 mm
Depth	402 mm
Weight (net)	23 Kg
Connectors	2 x AC PowerCon (input, link)
	2 x XLR (input, link)
	2x Ethercon RJ45 for Ethernet/DANTE (connection/link)
Material	Multilayer birch plywood, 1.5 mm powder coated steel front grille with acoustic grey cloth
Finish	Hi-resistance black Polyurea coating and protective rubber profiles

Note: Specifications subjected to change without prior notice.

ANNEX I. TOUCH PANEL OPERATION

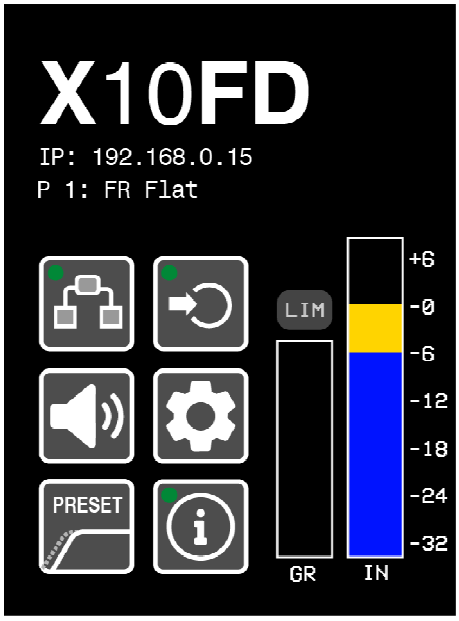

The Amate Audio X10FD unit comes equipped with internal signal processing, featuring an adjustable DSP that can be controlled via touchscreen. The key specifications of the display are:

- TFT-LCD panel
- 320x240 resolution
- 180-degree viewing angle
- 16.7 million colours

I.1. Main screen

When we connect the system, an initial loading screen appears displaying the Amate Audio logo, the firmware version, and the processing version. Once the system is initialized, a welcome screen is shown. This screen includes the speaker model and its serial number.

When the speaker it ready to work, the main screen is displayed, it has the following elements:

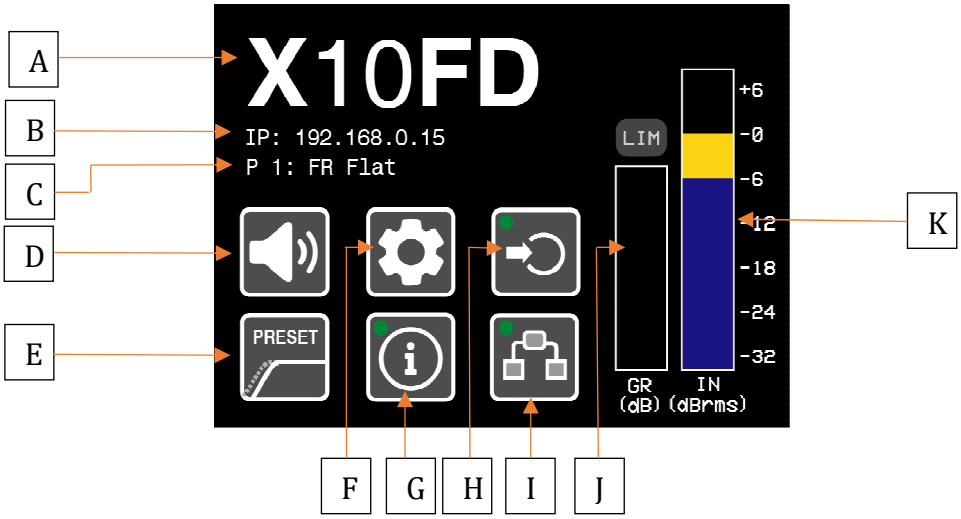

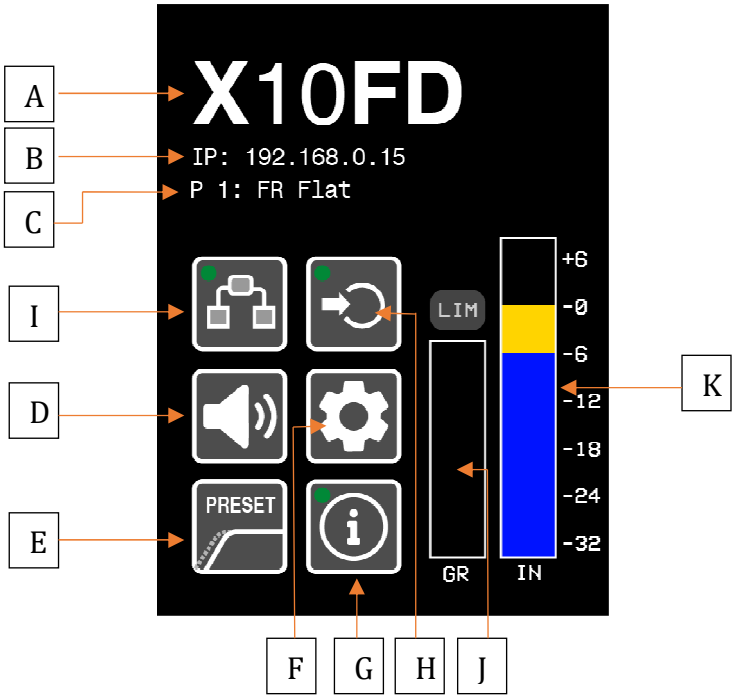

A. Speaker model
B. **IP**: IP address of the speaker.
C. **Preset**: Number and name of the active preset.
D. **Mute button**: When it is pressed, the button silences the audio output without turning off the amplifiers. This process permit return immediately to initial state when we touch again.
E. **Preset button**: Quick access to preset selection.
F. **Configuration button**: Access to the speaker's configuration. There you can configure specific adjustments. Access to this button can be protected by password. The default key is 1234.
G. **Information button**: Shows information about the active parameters of the speaker. In top-left corner, it has dynamic indicator.
    a. Green: The device is ready to use.
    b. Yellow: The device is in "Standby" mode.
    c. Red: The device is muted.
H. **Input button**: Indicates what the signal source is. Options include:
    a. Analog: for XLR input.
    b. Dante: for RJ-45 digital Dante input.
    c. Auto: Automatic selection between analogue and digital input.
I. **Network button**: Access to network configuration. In top-left corner, it has dynamic indicator.
    a. Green: The speaker is connected to the network.
    b. Yellow: The speaker is not connected to the network.

J. **Input Signal Meter**: Indicates the level of the signal input. The level is indicated in decibels relative to the sensitivity of the speaker with a headroom of 6dB. If the signals is over 0dB, a clipping indicator is shown in red.

I.2. Main MENU

With the unit unlocked and by pressing the configuration button (gear icon), we access the unit's setting screen.

A. **Audio:** Adjustment and configuration of the audio signal.
B. **Settings:** Configuration unrelated to the unit's audio.
C. **Advanced:** Advanced configuration parameters focused on technical personnel.

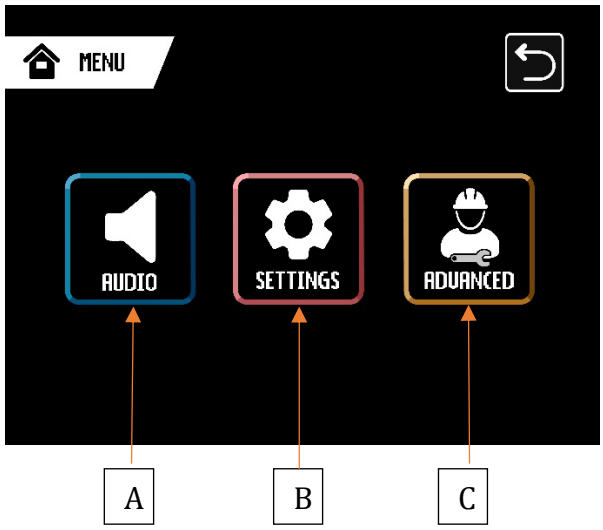

I.3. AUDIO submenu

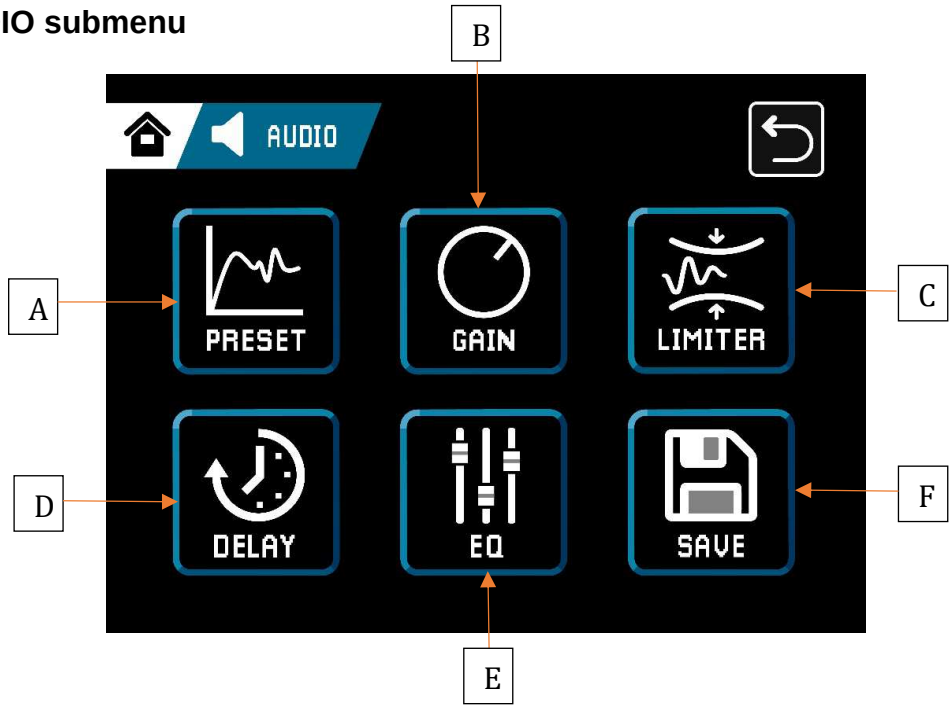

A. **Preset**: Selection of factory sound presets. The available factory presets depend on each model and can be found on each model user manual.
B. **Gain**: Control of the input gain using a fader that allows it to be adjusted to the needs of the application. The system can also be muted using the button with the speaker icon.
C. **Limiter**: Setting the threshold of the integrated limiter. The threshold indicates the level of input signal at which the limiter will start to act. The limitation indicator shows the behaviour of the limiter in real time, displaying the current gain reduction (GR: Gain Reduction).
D. **Delay**: Adjustment of the delay of the input signal. It can be configured in milliseconds or meters, showing the equivalence between the two. The polarity of the input signal can also be configured.
E. **Save**: Access to the unit's internal memories. Allows creating a new user preset with the current configuration of the equalizer, delay, gain, and limiter. There are up to a maximum of 24 memories available.

I.4. SETTINGS menu

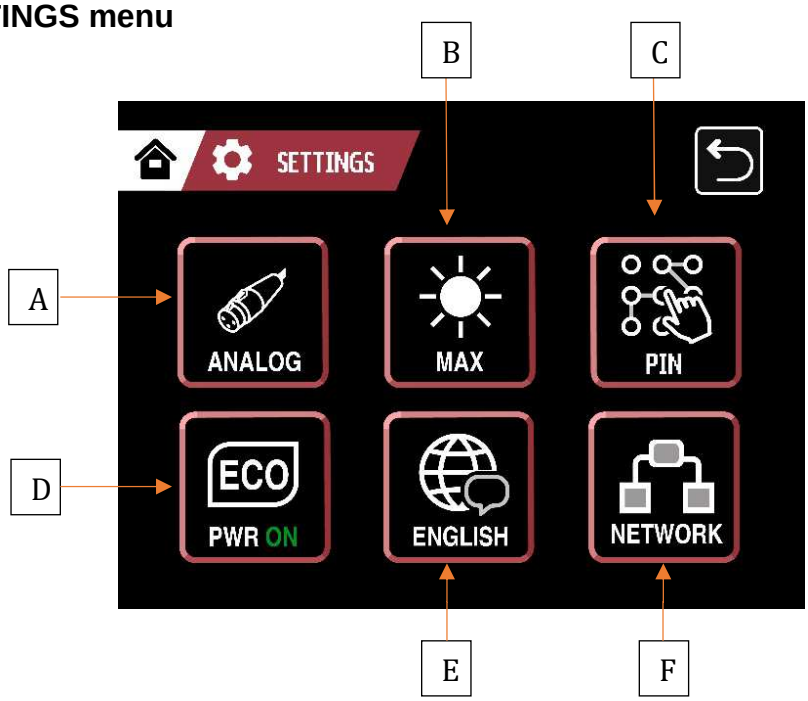

A. **Input Selection**: Allows us to choose which input the internal processor will use. The options are ANALOG, DANTE, or AUTO. In AUTO mode, the unit automatically chooses the audio source. In case of conflict (simultaneous use of XLR and Dante connectors), the unit prioritizes the Dante digital signal. If the Dante signal becomes unavailable at any point, the unit automatically switches to the analogue input.
B. **Screen Brightness:** Three levels of brightness can be selected: MAX (Maximum), MED (Medium), and MIN (Minimum).

C. **PIN Lock:** Allows setting up a lock on the unit via a PIN code. With PIN lock configured and activated, a locked padlock icon is displayed on the main screen. To unlock the unit, it is necessary to press on the padlock and enter the unlock code.
D. **ECO Button:** Configures the behaviour of the unit's internal amplification stages.
    a. PWR ON: The amplification system is operational and ready for immediate delivery of amplified signal.
    b. STANDBY: The amplifiers enter a resting state, thus they will not emit a signal even if the unit is powered on.
    c. AUTO: The amplifiers remain in rest until an input signal is detected, at which point they become operational.
E. **Language Selection:** Allows selecting the language of the interface. The options are SPANISH, CATALAN, and ENGLISH.
F. **Network Button**: Allows configuring the IP address and network mask of the speaker.

I.5. ADVANCED menu

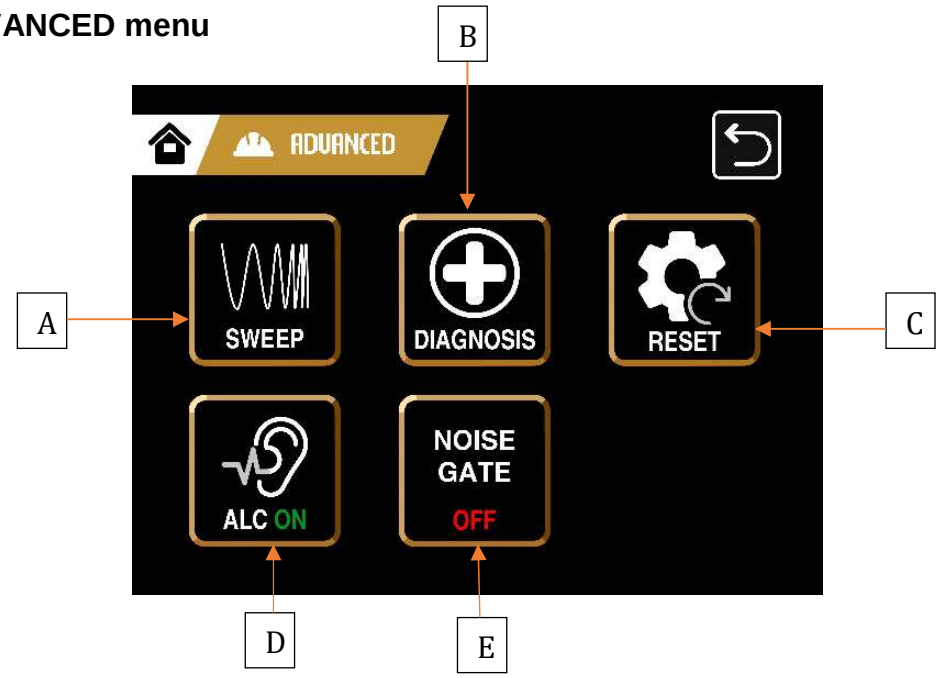

A. **Sweep:** Acoustic diagnostic of the unit. A sinusoidal wave is emitted that sweeps through the entire audible A sweep will be performed for each loudspeaker way. The duration of each sweep is approximately two seconds.
B. **Diagnosis:** Access to the system information menu. In this menu, we can find information regarding the use of the speaker and data on the current, temperature, and the status of the device.
C. **Reset**: Resets all the parameters. A pattern is requested as confirmation for the process. Once done, all parameters and settings revert to factory defaults.

D. **ALC: (available in selected models only)** Allows activating or deactivating the Automatic Loudness Compensation algorithm. This algorithm is based on psychoacoustic studies, which show that the ear loses sensitivity to low and high frequencies as the volume increases. The algorithm compensates for this nonlinear behaviour of the ear, enhancing the presence of low and high frequencies as the signal level decreases. Its use is not recommended for live sound applications. It is ideal for fixed installations or background music systems.
E. **Noise Gate: (available in selected models only)** Allows activating or deactivating the noise gate. This dynamic processor is used to eliminate possible noises produced by the electroacoustic components of the speaker when it is not reproducing sound.

amate audio
Great sound from Barcelona since 1972

DECLARATION OF CONFORMITY

In accordance with EN 45014:1998

Manufacturer's Name:	"AMATE AUDIO S.L."
Manufacturer's Address:	C/ Perpinyà 25, Polígon Industrial Nord 08226 Terrassa, (Barcelona), SPAIN
Brand:	"AMATE AUDIO"

We declare under our own responsibility that:

Product:	Active speaker systems with DSP. Audio apparatus for professional use
Name:	Xcellence X10FD

Conforms to the following product specifications:

Safety:	IEC 60065-01 + A1
EMC:	EN 55022:2006 EN 55103-1:2009 EN 55103-2 2009 FCC Part 15

WARNING:

In accordance to EN55022, this is a class A product. In a domestic environment this product may cause radio interference in which case the user may be required to take adequate measures.

Supplementary Information
The product herewith complies with the requirements of the:

Low Voltage Directive 2006/95/EC
EMC Directive 2004/108/EC
RoHS Directive 2002/95/EC
WEEE Directive 2002/96/EC

With regard to Directive 2005/32/EC and EC Regulation 1275/2008 of 17 December 2008, this product is designed, produced, and classified as Professional Audio Equipment and thus is exempt from this Directive.

Date of issue: November 1rst., 2025

Signature:

AMATE AUDIO S.L.
N.I.F: B59103481
Violinista Vellsolà, 18
Tel: +34 93 736 23 90
08222 - Terrassa
Barcelona – SPAIN

CE

Conformity Marking

Joan A. Amate Martinez
General Manager

Great sound
from Barcelona
since 1972

XCELLENCE speaker systems have been designed, engineered and manufactured in Barcelona – SPAIN by

Los **sistemas acústicos XCELLENCE** han sido diseñados y fabricados en Barcelona – ESPAÑA por

Amate Audio S.L.
Perpinyà, 25 · Polígon Industrial Nord · 08226 Terrassa
T. +34 93 735 65 65 – F. +34 93 735 60 48 –
info@amateaudio.com

R&D and FACTORY:
Violinista Vellsolà, 18 · 08222 Terrassa

Barcelona – SPAIN

www.amateaudio.com

© Copyright 2026 by Amate Audio S.L.