www.amateaudio.com

Great sound
from Barcelona
since 1972

User's manual

XA209

XCELLENCE

February 2026

Amate Audio S.L.

EXPORT & CUSTOMER SERVICE
Perpinyà, 25 · Polígon Industrial Nord
08226 Terrassa · Barcelona – SPAIN
T. +34 93 735 65 65
export@amateaudio.com

R&D, FACTORY AND MANAGEMENT
Violinista Vellsolà, 18
08222 Terrassa · Barcelona – SPAIN
T. +34 93 736 23 90
info@amateaudio.com

Safety Instructions

1. All safety instructions must be read before using this device.

2. Keep and follow these instructions

3. Heed all warnings

4. The exclamation mark in the triangle indicates internal components which if replaced can affect safety.

5. The lightning symbol within the triangle indicates the presence of dangerous uninsulated voltages.

6. Only clean the device with a dry cloth.

7. Do not block any ventilation openings. Install in accordance with the manufacturer's instructions.

8. Do not install the device near heat sources such as radiators, heaters or other heat-emitting elements.

9. Protect the power cord from being walked on or pinched, particularly at plugs, convenience receptacles, and the point where they exit from the apparatus

10. The equipment must be repaired by qualified technical service personnel when:
A. The mains supply cable is damaged, or
B. Any object or liquid has damaged the device; or
C. The equipment does not function normally or correctly; or
D. The equipment has been exposed to the rain; or
E. The chassis is damaged

11. Disconnect the device in the case of electric storms or during long periods of disuse.

12. WARNING – To reduce the risk of fire or electric shock, do not expose this device to rain or moisture

13. The equipment shall not be exposed to dripping or splashing and no objects filled with liquids, such as vases, shall be placed on the device.

14. For hanging and installation, use manufacturer recommended accessories only.

1. INTRODUCTION

1.1 General product information

Amate Audio thanks you for the trust placed in our Xcellence loudspeaker systems. The Xcellence series combines the convenience of a self-powered system and the flexibility of the DSP (digital system processing) for cabinet control. More than 50 years' experience in amplifier and acoustic cabinet design using the highest technology and components come together to give you a product ideal for a multitude of applications, especially those which require high levels of sound pressure and a control of vertical coverage. Stadiums, theatres or big events will become the perfect places for their use. We suggest you read the following information with attention, assured that it will be of maximum use in helping you to achieve the best results and optimum performance.

1.2 What is a line array?

The trend in sound reinforcement has been to increase both the sound pressure level (SPL) and the size of the audience to be covered. This leads to an increase in the number of cabinets and, as a result of this, an increase in the total size and weight.

A line array is a group of independent sound sources, which are vertically stacked in order to transform the spherical wave fronts generated by individual sources into a single flat wave front.

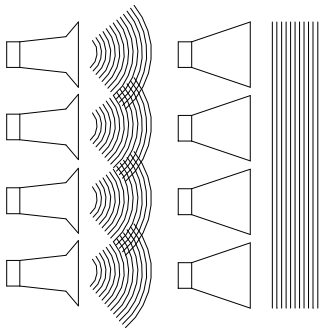

Fig.1. Wave field interference for different wave fronts.

To carry out effectively arraying individual sound sources the system must follow the acoustic coupling conditions based on the wavelength, the shape of each source, the surface area of each transducer and the relative source separation.

An assembly of individual sound sources arrayed with regular separation between the sources on a plane or curved continuous surface is equivalent to a single sound source having the same dimensions as the total assembly if the following conditions are fulfilled:

- The step of source separation, defined as the distance between the acoustic centres of the individual sources, is smaller than half the wavelength over the bandwidth of operation.

$$d <= \lambda/2$$

It is not difficult to fulfil this first condition for the low and mid frequencies. For example, two 7" loudspeakers that are separated by 17 cm will reproduce a cylindrical wave up to 1015 Hz.
This condition is difficult to be fulfilled for the high frequencies, as their wavelengths are too small to make the adjacent acoustic centres any smaller than λ/2. Here comes the second "arrayability" criterion.

- The wave fronts generated by the individual sources are planar and the combined surface area of the sources fills at least 80% of the total target surface area:

$$H_1 \cdot W + H_2 \cdot W + \ldots + H_n \cdot W >= 0.8 \cdot H \cdot W$$

This is achieved by using waveguides, which are coupled to the compression drivers output. We achieve flat wave fronts with a constant phase. By vertically assembling these waveguides, we fulfil the second criterion of line array construction.

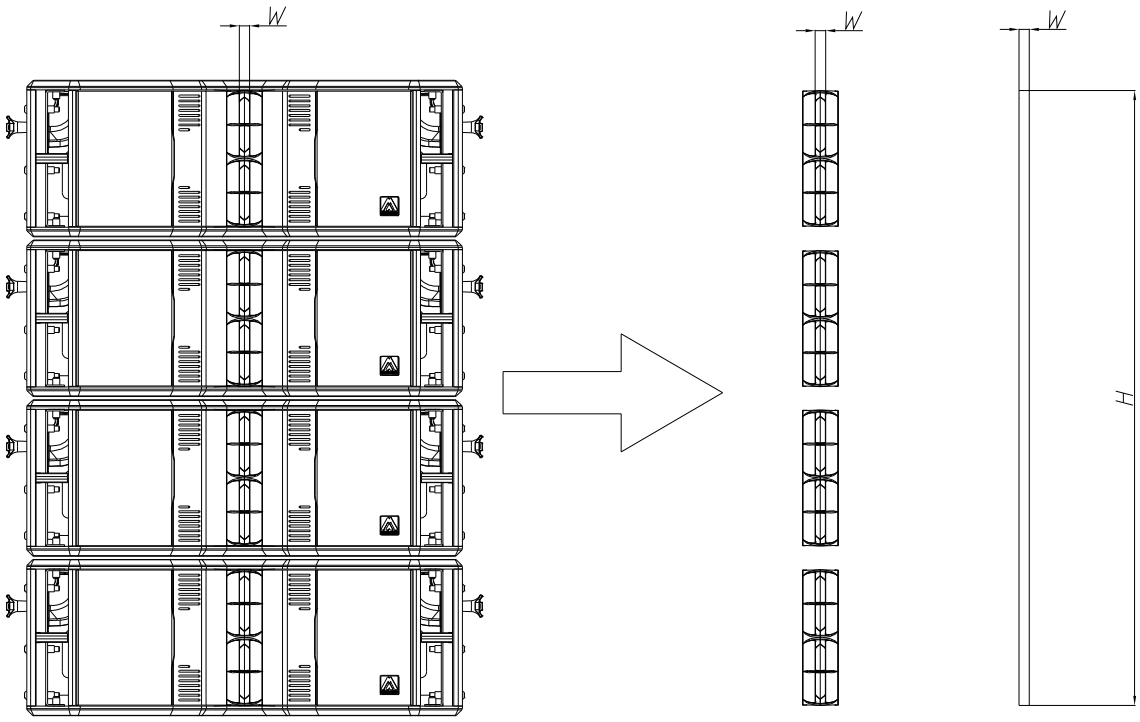

Fig.2. Second criterion of "arrayability"

- The deviation from a flat wave front must be less than λ/4 at the highest operating frequency (this corresponds to less than 5 mm curvature at 16 kHz).

This third condition can be explained through our property waveguide. Thanks to some complex mathematical calculations, we have obtained a component, which is able to adapt the circular section of the compression driver to a rectangular section, getting on-phase waves at the end of the guide. This flat wave front is ideal for vertical configurations.

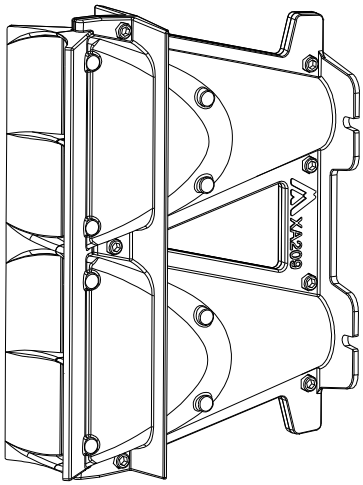

Sound engineers use line arrays to obtain narrow directivities on the vertical plane. For configurations with many cabinets (big height) and at high frequencies, it is not unusual to achieve narrow angles- in some cases they may be grade fractions. This can be useful in venues where both a high sound pressure level and long throw are required; nevertheless, this means less coverage of the audience area.

It is sometimes useful to achieve an asymmetrical coverage pattern on the vertical plane, which can be obtained by aiming some of the cabinets through their hinging points. We are now ready to define the last two criteria of "arrayability".

Fig.3. High frequency waveguide

- For curved arrays, the tilt angles should vary in inverse proportion to the listener distance (this is geometrically equivalent to shaping variable curvature arrays to provide equal spacing of individual element impact zones).

- There are limits given the vertical size of each cabinet and their relative tilt angles. In our case, the maximum tilt angle (between cabinets) is 10º.

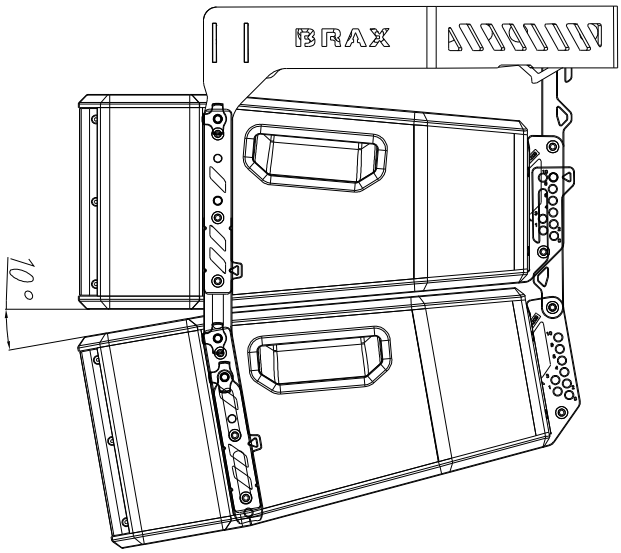

Fig.4. Tilt angle between cabinets (10º maximum)

1.3 Fresnel Region (Near Field) and Fraunhofer Region (Far Field)

As our system is able to fulfil the previous conditions, it will produce cylindrical waves to a maximum frequency. The wave will be flat up to a certain distance where it will start to become spherical (depending on the frequency and the size of the array).

The limit distance between the zone of cylindrical waves (Fresnel) and spherical waves (Fraunhofer) can be calculated through the following formula:

$$d_c = \frac{3}{2} H^2 f \sqrt{1 - \left(\frac{1}{3Hf}\right)^2}$$

where,
d_c= limit distance between near field and far field (in metres)
H = height of the array (in metres)
f= frequency (in kHz)

In the near field region (Fresnel), the wave front is cylindrical and waves only expand on the horizontal plane (95º). The height of the wave front is, in this case, the total height of the array.

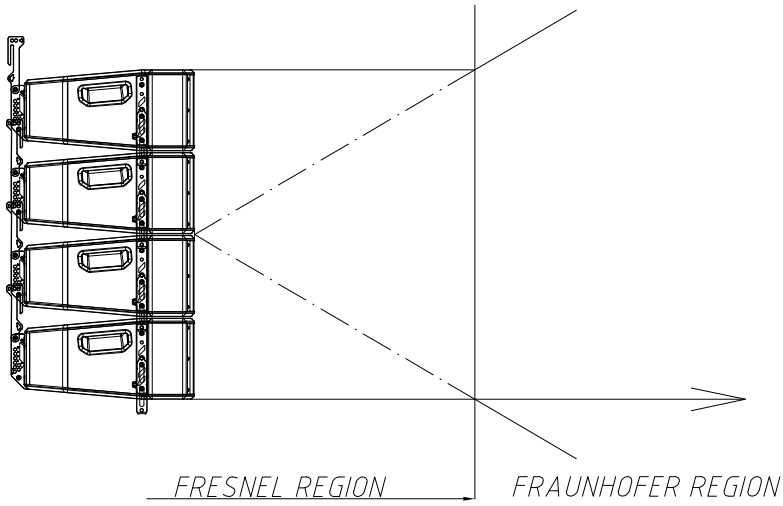

In the far field region (Fraunhofer), the wave front is spherical and expands both on the horizontal and vertical planes. The horizontal coverage is 95º and the vertical coverage is defined by the frequency and the height of the array.

Fig.5. Limits of Fresnel-Fraunhofer Regions

We can create a chart with some of the basic configurations and their performance regarding wave propagation.

	4xXA209	6xXA209	8xXA209	12xXA209	16xXA209
500Hz	0.5 m	1.5 m	2.8 m	6.5 m	11.7 m
1000Hz	1.4 m	3.2 m	5.9 m	13.2 m	23.6 m
2000Hz	2.9 m	6.6 m	11.8 m	26.6 m	47,4 m
4000Hz	5.9 m	13.2 m	23.7 m	53.3 m	95 m
8000Hz	11.7 m	26.6 m	47.5 m	106.6 m	190 m
16000Hz	23.5 m	53.3 m	95 m	212.4 m	380.1 m

Fig.6. d_c Calculation

A 6-cabinet array has a near field extending to 6.6 metres at 2kHz. Beyond this distance, the wave front will be spherical.

In the first zone (Fresnel), sound pressure loss is only 3 dB per doubling of distance, whereas in the second zone (Fraunhofer) the loss is 6 dB. In long throw and high SPL configurations, it is very important to produce cylindrical waves.

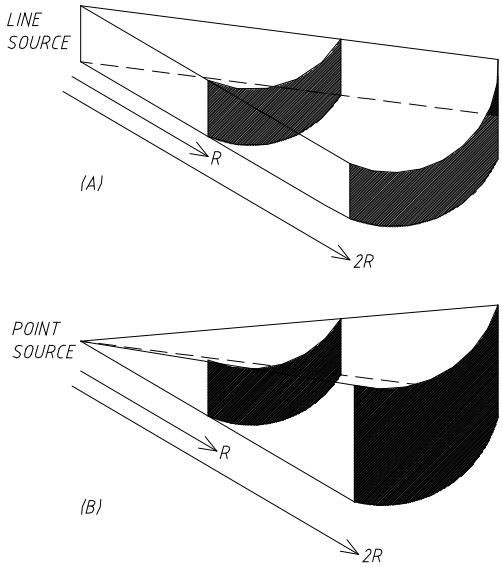

Fig.7. Cylindrical wave (A) vs. Spherical wave (B)

(A): -3 dB / doubling of distance
(B): -6 dB / doubling of distance

1.4 Features and presentation

XA209

- Active self-powered two-way acoustic system
- XLR electronically balanced input & XLR parallel link
- AC PowerCon input & link
- EtherCon RJ45 input & link
- 1 Gbps Ethernet connectivity with Dante™ audio networking
- 2500W class D amplifier for mid-bass range
- 500W class D amplifier for high range
- 24-bit AD/DA converters with 112 dB dynamic range, 48 kHz sampling rate
- DSP Controls (presets, parametric EQs, delay, mute, volume and limiters)
- Amplifier self-diagnostics: input level, temperature, limiter active
- Overvoltage protection (>250V-400V)
- 2 x 8” neodymium woofers with long excursion dual 2” voice coil
- 2 x 1.7” HT polymer diaphragm neodymium drivers coupled to a HF waveguide
- 95 x 10º dispersion

XA209P

- Passive two-way acoustic system
- NL4MP Speakon input
- Program power 1400 W (LF) + 160 W (HF)
- 2 x 8” neodymium woofers with with long excursion dual 2” voice coil
- 2 x 1.7” HT polymer diaphragm neodymium drivers coupled to a HF waveguide
- 95 x 10º dispersion

2. XA209 FEATURES

The XA209 cabinet is ideal for a multitude of applications. It includes 2500W amplification for the mid-low range woofers, 500W for the high range compression drivers and digital signal control by DSP. The manufacturer presets make it easy, flexible and user-friendly. The result is a clean, high quality sound at full power in larger sites.

2.1 Technical description

The XA209 cabinet comes with DSP control, full range sound delivery thanks to its direct radiation transducers and acoustic bass reflex cabinet. As a full range system, its response is 70 Hz-19 kHz (-10 dB). It has 3000W continuous amplification (2500W + 500W), thermal protection, output short circuit protection, independent peak and RMS power limiters for each channel, and protection against overvoltage. The DSP includes several presets which can be selected either accessing the cabinet's rear control screen or via the computer with Ethernet connection.

The XA209 cabinet is connected using the XLR balanced connector or via Dante™ audio networking, using the RJ45 connectors. Mains supply is through PowerCon.

The XA209 cabinet is built in birch plywood, which has a high resistance to vibrations and humidity with black Polyurea paint coating. The front face is protected by two 1.5 mm thick steel grilles with acoustically transparent grey cloth. It includes two in-built lateral handles for an easy and comfortable transport.

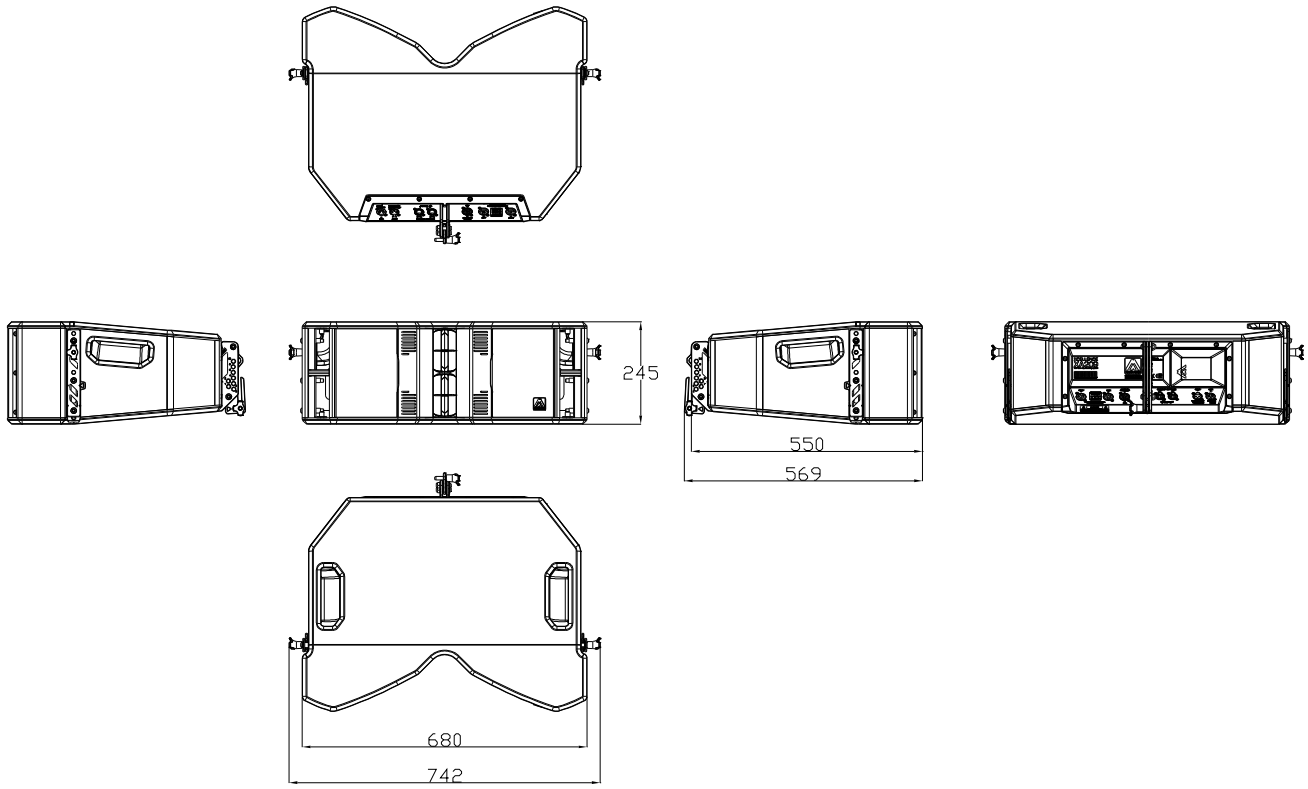

Fig.8. XA209 external dimensions

3. PRESETS

The XA209 includes several manufacturer presets for different types of application. The DSP system can also store up to 24 other presets, depending on user requirements

3.1 Standalone line source

Deployed as a line source system, the system operates over the nominal bandwidth of the XA209 enclosure (70 Hz – 19 kHz, -10dB).

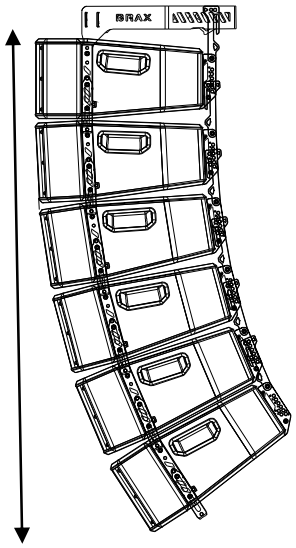

Model: XA209
Preset: [FR FLAT]

The recommended minimum number of cabinets to be used as a standalone line source system is 6 cabinets. We do not recommend using less than 6 cabinets per side.

3.2 Standalone line source including NearField and Longthrow cabinets

Deployed as a line source system of 8 cabinets or more, you may need to use some cabinets as Longthrow cabinets (the upper ones) and some cabinets as NearField cabinets (the lower ones). The system operates over the nominal bandwidth of the XA209 enclosure (70 Hz – 19 kHz, -10dB).

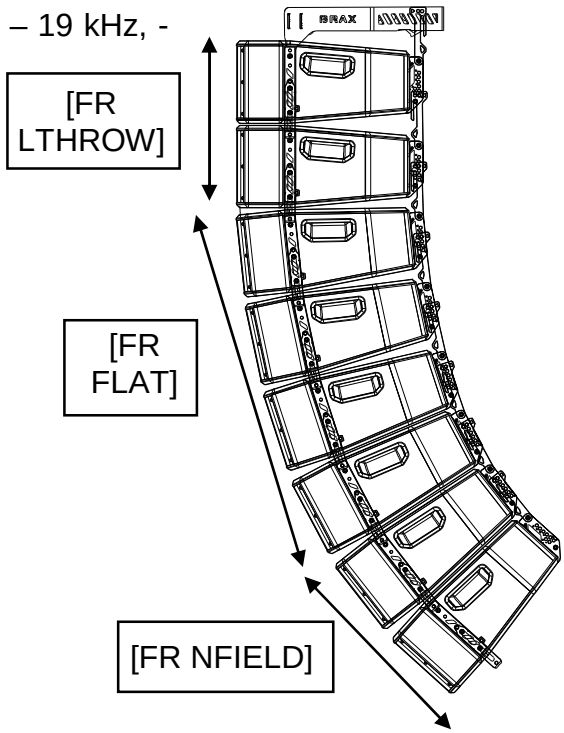

Model: XA209
Preset: [FR LONGTHROW]

Model: XA209
Preset: [FR FLAT]

Model: XA209
Preset: [FR NEARFIELD]

3.3 Line source with XW218 extension on floor

The XW218 provides an extension of the bandwidth in the low end, down to 25 Hz. The system operates over the nominal bandwidth 25 Hz – 19 kHz, -10dB.

This extension can be done at the 90 Hz crossover point. The corresponding preset must be selected on the XA209, as shown below:

Model: XA209
Preset: [HPF90 FLAT]

[HPF90 FLAT]

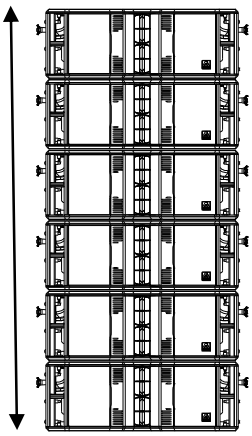

Model: XW218
Preset: [X-ALIGNED]

[X-ALIGNED]

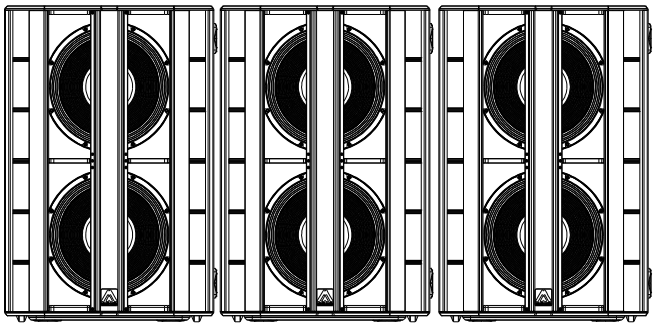

The minimum number of cabinets to be used as a line source system is 6 cabinets. We do not recommended using less than 6 cabinets per side.

Place the subwoofers side by side. If not possible, the maximum distance between two adjacent acoustic centres must be 1.9m when the upper frequency limit of the subwoofer is at 90 Hz.

SYSTEM ALIGNMENT
The system is pre-aligned from the factory. Do not forget to add the geometric delay depending on the configuration used.

3.4 Line source (including NearField and Longthrow cabinets) with XW218 extension on floor

The XW218 provides an extension of the bandwidth in the low end, down to 25 Hz. The system operates over the nominal bandwidth 25 Hz – 19 kHz, -10dB.

This extension can be done at the 90 Hz crossover point. The corresponding preset must be selected on the XA211, as shown below:

Model: XA209
Preset: [HPF90 LONGTHROW]

Model: XA209
Preset: [HPF90 FLAT]

Model: XA209
Preset: [HPF90 NEARFIELD]

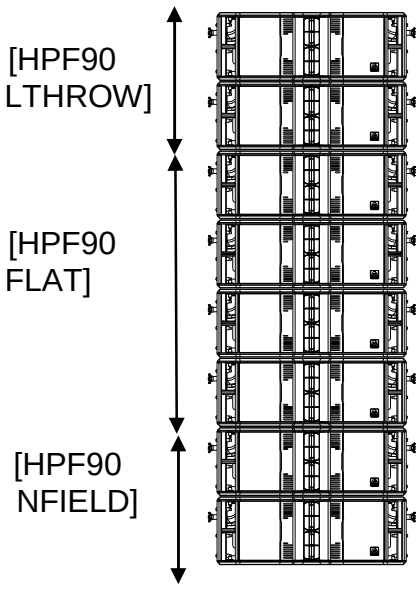

Model: XW218
Preset: [X-ALIGNED]

[X-ALIGNED]

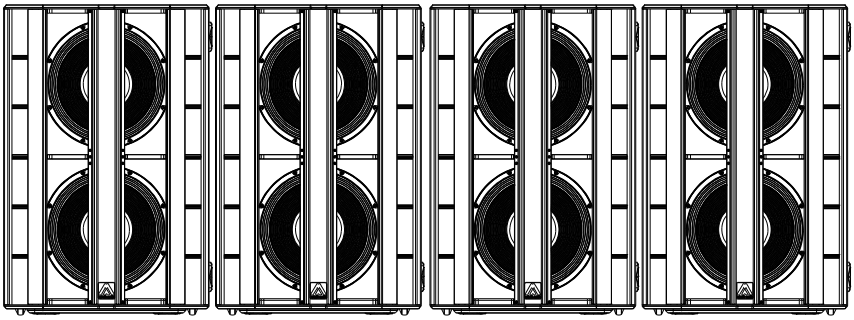

The minimum number of cabinets to be used as a line source system is 6 cabinets. We do not recommended using less than 6 cabinets per side.

Place the subwoofers side by side. If not possible, the maximum distance between two adjacent acoustic centres must be 1.9m when the upper frequency limit of the subwoofer is at 90 Hz.

SYSTEM ALIGNMENT
The system is pre-aligned from the factory. Do not forget to add the geometric delay depending on the configuration used.

3.5 Standalone line source (with XA211)

Deployed with XA211 cabinets, the XA209 can operate as a NearField system.

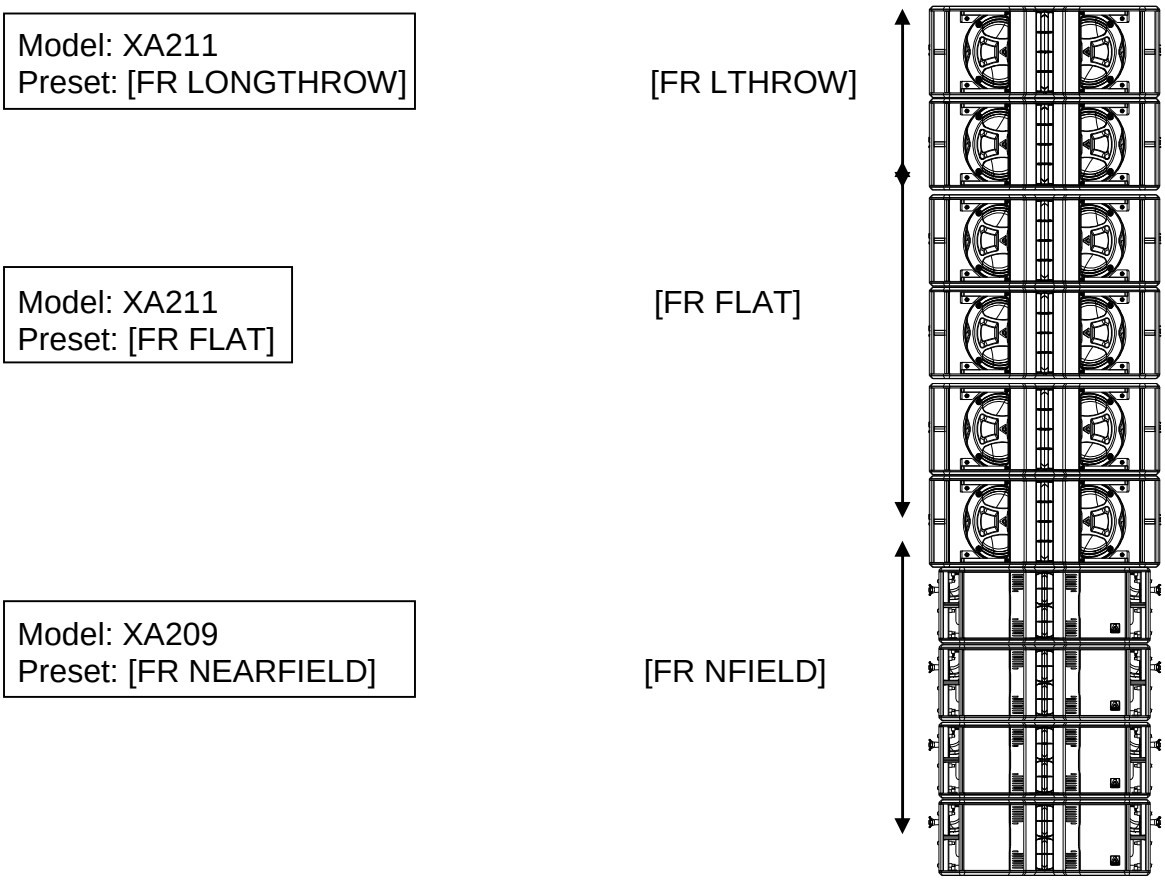

SYSTEM ALIGNMENT
XA209 and XA211 cabinets are pre-aligned from the factory.

3.6 Line source with XA211 and XW218 extension on floor

The XW218 provides an extension of the bandwidth in the low end, down to 25 Hz.

This extension can be done at the 90 Hz crossover point. The corresponding preset must be selected on the XA209 and XA211, as shown below:

Model: XA211
Preset: [HPF90 LONGTHROW]

[HPF90 LTHROW]

Model: XA211
Preset: [HPF90 FLAT]

[HPF90 FLAT]

Model: XA209
Preset: [HPF90 NEARFIELD]

[HPF90 NFIELD]

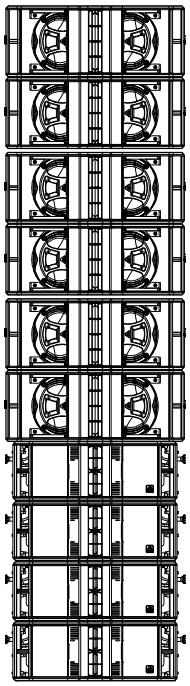

Model: XW218
Preset: [X-ALIGNED]

[X-ALIGNED]

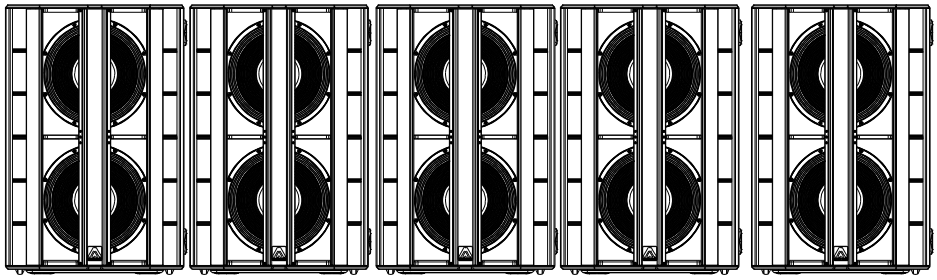

Place the subwoofers side by side. If not possible, the maximum distance between two adjacent acoustic centres must be 1.9m when the upper frequency limit of the subwoofer is at 90 Hz.

SYSTEM ALIGNMENT
The system is pre-aligned from the factory. Do not forget to add the geometric delay depending on the configuration used.

4. CONTROL AND CONNECTION PANEL

The XA209 control panel contains the following elements:

Fig.9. XA209 control and connection panel

A) TOUCHSCREEN: Displays information about the System status: current preset, network IP, amplifier temperature and signal input level. Allows the user to configure the system without the need of an external computer: IP address setting, Preset selection, Delay, Gain, Limiter, ECO mode on/off, Signal LEDs on/off, etc.
NOTE: The default PIN to access the setup menu is “1234”.

B) OVERVOLTAGE PROTECTION: These LEDS show the status of the AC mains supply.

- **POWER ON:** (Blue) When lit, the equipment is ON and the AC input level is within the permitted range (up to 260 VAC).
- **>250V:** (Red) When activated, the AC voltage is permanently out of the permitted range of the equipment, so it will remain under protection until this condition is solved. Revise your connections and mains power installation and consider that other equipment connected to this line may have been damaged.

C) NETWORK: Two 8-pin RJ45 / EtherCon® compatible connectors for the connection to Ethernet networks up to 1Gbps. This connection can be used for remote control via software (DSPStudio) and for audio signal input via Dante™ audio networking. Please refer to Amate Audio DSPStudio Quick Installation Guide for more information on remote connection. The two connectors are interconnected by means of an internal switch, so they can be used interchangeably and allow the chain connection of several boxes. **IMPORTANT:** If Dante is used it is not recommended to chain more than eight units, due to latency reasons.

D) BALANCED INPUT/LINK:
XLR-3 Female balanced signal connector for signal input.
XLR-3 Male connector for parallel connection of various cabinets with the same input signal.

Nominal Input sensitivity: +8dBu (2 Vrms)
Maximum Input Voltage without input compression: +14dBu (4Vrms)
Maximum Input Voltage without clipping: +20dBu (8Vrms)

IMPORTANT: Please always use balanced microphone cable with the following pin assignment:
1= Shield (Ground) 2= Live (+) 3= Return (-)

E) AC MAINS INPUT/LINK: Mains supply connection via PowerCon.

- Blue connector for AC in.
- Grey connector to feed other units in parallel. Linking up to four units is possible, provided that a quality cable of a minimum section of 3x2.5mm^2 is used. Connecting more than four units in parallel may lead to a voltage drop in the cable that will reduce the equipment performance.

Always use mains power cable supplied by the manufacturer.
Never connect the Xcellence cabinets to an unearthed mains supply or by using an unearthed mains cable.

F) AUTHENTICATION QR CODE: This QR code is a smart label that ensures that the product is an original Amate Audio product. To verify the authenticity, please follow the instructions in the following link:
http://www.amateaudio.com/en/product-authentication/

G) OUTPUT TO XA209P
Speakon connector used to feed one passive XA209P. In order to assure proper operation always follow these instructions:

- Link only ONE unit of XA209P with each XA209.
- Do not connect a loudspeaker different from a XA209P to this output.
- Do not change or manipulate this connector.

Misusing the slave output for XA209P may lead to serious damage for all involved equipment, and will not be covered by the warranty.

The XA209P control panel contains the following elements:

H) SPEAKON INPUT:

PIN+1: POSITIVE LOW
PIN-1: NEGATIVE LOW
PIN+2: POSITIVE HIGH
PIN-2: NEGATIVE HIGH

Always respect the polarity +/-

I) SPEAKON LINK: This output should only be used if the entire line array system is made up of XA209P passive cabinets (without using XA209 active cabinets).

PIN+1: POSITIVE LOW
PIN-1: NEGATIVE LOW
PIN+2: POSITIVE HIGH
PIN-2: NEGATIVE HIGH

Always respect the polarity +/-

J) AUTHENTICATION QR CODE: This QR code is a smart label that ensures that the product is an original Amate Audio product. To verify the authenticity, please follow the instructions in the following link:
http://www.amateaudio.com/en/product-authentication/

Fig. 10. XA209P control and connection panel

5. CONNECTING

5.1 Parallel connection

5.1.1 Analogue Audio Signal

Connect the signal (mixing desk output) to INPUT on the first unit. Use the LINK output to transfer the INPUT signal to the second unit and thus sequentially for further units. All of the units in this chain must be switched on.

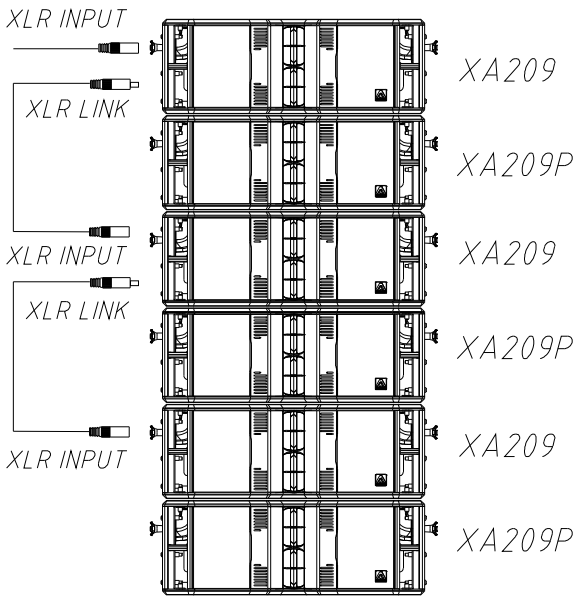

Fig.11. Parallel connection for the XA209 (signal)

5.1.2 Network

The two available Ethernet ports via the EtherCon RJ-45 connector are internally switched and both can be used as input and link to other cabinets. All of the units in this chain must be switched on.

The number of units allowed in parallel or daisy chain depend on whether Dante audio networking is being used.

When using Dante, a maximum number of 8 cabinets is recommended due to latency reasons. When not, there is no specific limit for daisy chaining (control and monitoring using DSPStudio®).

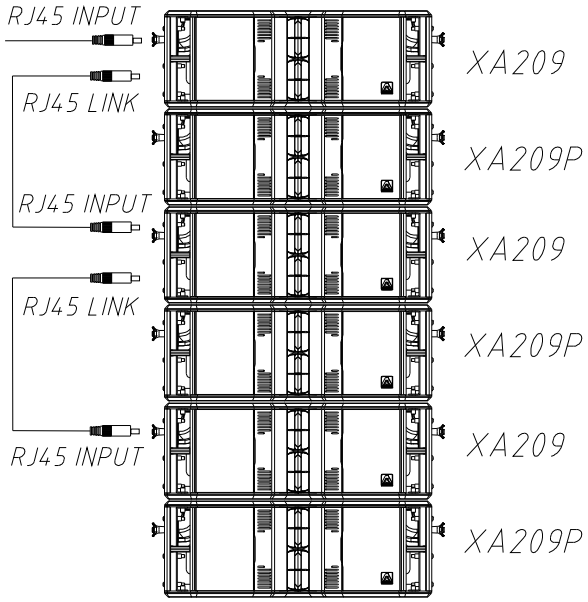

Fig.12. Parallel connection for the XA209 (network). You can link up to eight units when using Dante networking, or more when not using it

5.1.3 Mains Power

For the mains connection in parallel use the cable with grey Neutrik PowerCon NAC3FCB at one end and the blue Neutrik PowerCon NAC3FCA at the other end.

Do not connect more than four XA209 units using the AC Mains link connector. Do not connect Xcellence series units in parallel using PowerCon-PowerCon without earth.

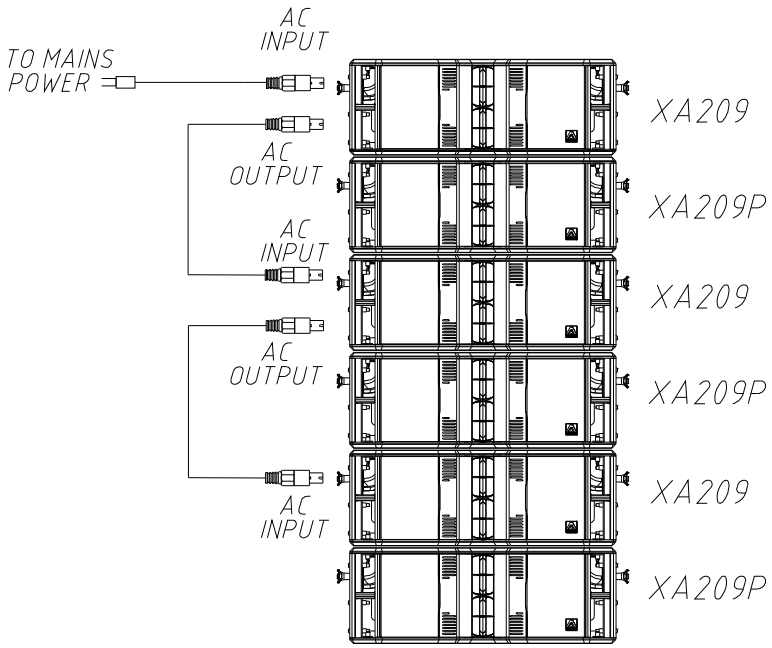

Fig.13. Parallel connection for the XA209 (mains). You can link up to four units

5.1.4. Connection between XA209 (active) and XA209P (passive)

Use the speaker cable (supplied with the equipment) to join the active box with the passive one. Connect the OUTPUT TO XA209P of the XA209 box (active) to the INPUT of the XA209P box (passive).

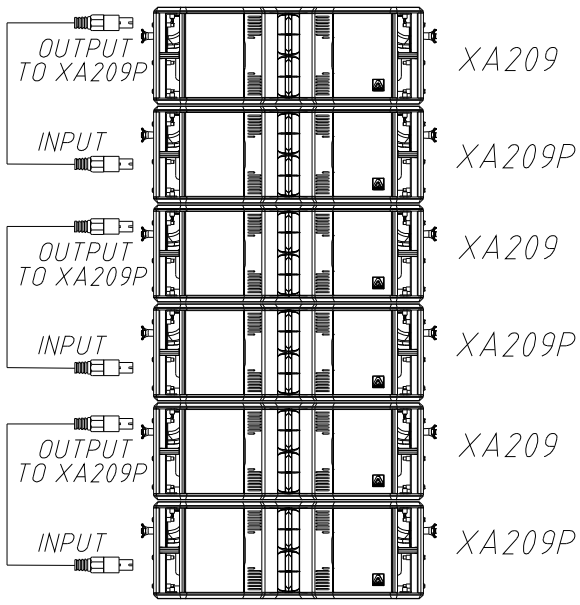

Fig. 14. Connection between XA209 (active) and XA209P (passive)

5.2 Parallel connection with subwoofers

You can connect the XA209 in parallel with XW218 subwoofers or other units. Please, follow the same parameters as explained in the following diagrams:

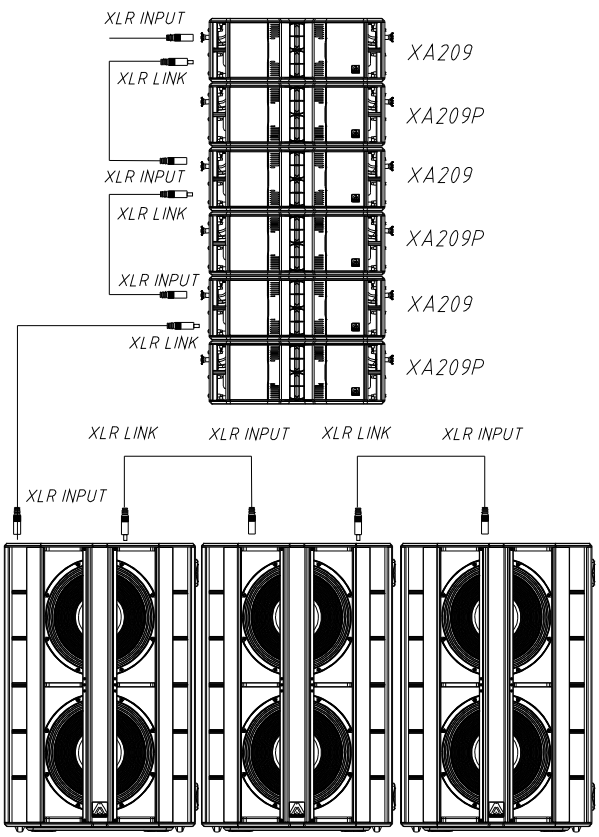

Fig.15. Parallel connection for the XA209 and XW218 (signal)

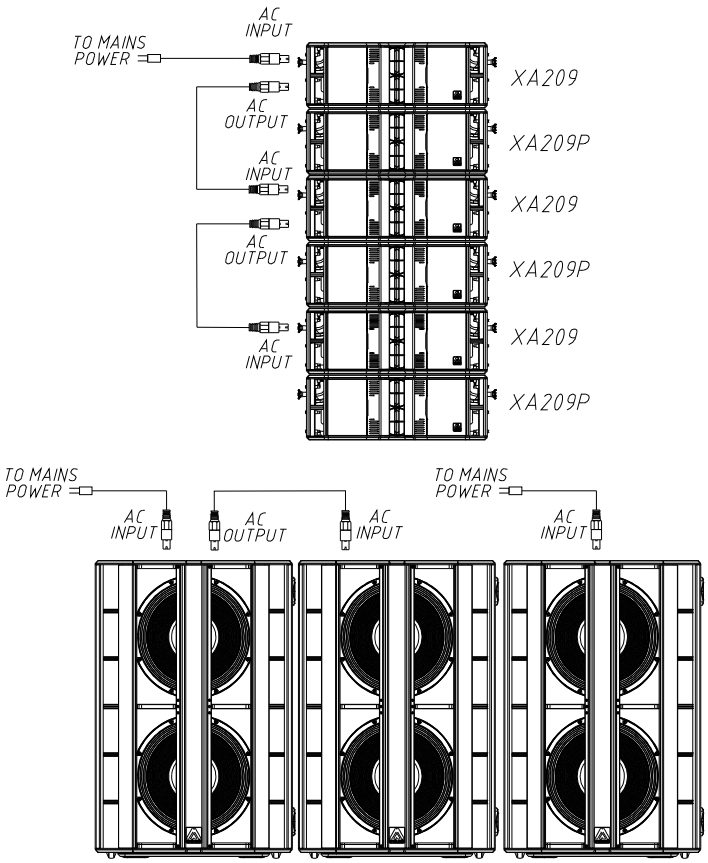

Fig.16. Parallel connection for the XA209 and XW218 (mains). Do not connect more than four units of XA209 or two units of XW218 using the AC Mains link connector.

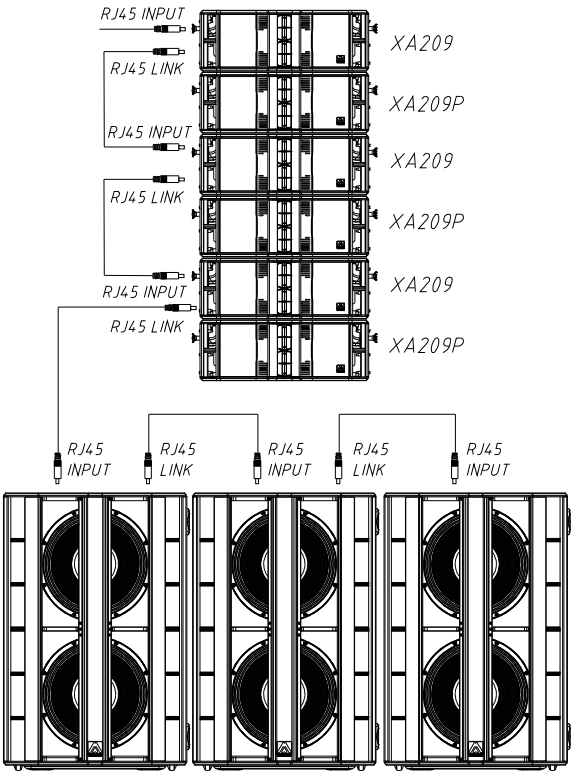

Fig.17. Parallel connection for the XA209 and XW218 (network). Do not daisy-chain more than eight units of each when using Dante networking (as in the diagram)

6. OVERVOLTAGE PROTECTION

The active Xcellence series models incorporate an exclusive protection by Amate Audio against mains voltage overload and other related problems (loss of neutral, connection between phases, etc.). In the mains input an electronic circuit compares the input voltage with a reference value. When the input exceeds 250 Volts, the circuit reacts by blocking the input tension until it returns to its correct limits (230V +/- 10%). When the overvoltage LED lights up red, the unit stops running, until the correct voltage is re-established.

Generally, the cause of such an anomaly tends to be a neutral voltage drop or incorrect connection of the equipment to 400V supply. Whenever the overvoltage LED lights up, check the tension of the electrical phases: other devices in the sound system are also at risk of electrical fault and severe damage.

7. MOUNTING AND INSTALLATION

Flying an XA209 system is easy, fast and secure. To perform any operations related to flying the system, read the present document, and act on the warnings and advice given.
Only experienced installers with adequate knowledge of the system and local safety regulations should fly speaker cabinets.

It is the user's responsibility to ensure that the systems to be flown and the flying accessories (such as chains, eyebolts, lock pins...) comply with state and local regulations. They should be regularly inspected and replaced if in doubt. When flying enclosures from ceiling support structures, extreme care should be taken to assure the load bearing capabilities of the structures. Do not fly systems from unsafe structures. All flying accessories that are not supplied by Amate Audio are the user's responsibility. Use at your own risk.

Remember that no risks should be taken concerning public safety.

7.1 Description

Each XA209 cabinet includes two lateral rigging bars, one on each side of the enclosure (A). These structures are manufactured from stainless steel; they are affixed to some internal plates with special crop resistant screws. There are two lateral rigging guides (B), inside each of the rigging bars, which are used to join the cabinets.

A third back rigging (C) guide and rigging bar (F), assembled on the back side of the cabinet, are used to vertically join the cabinets and to tilt them.

Angles can be changed from 0º to 10º. To safely lock the rigging bars, the lock pins (D) and (E) must be used.

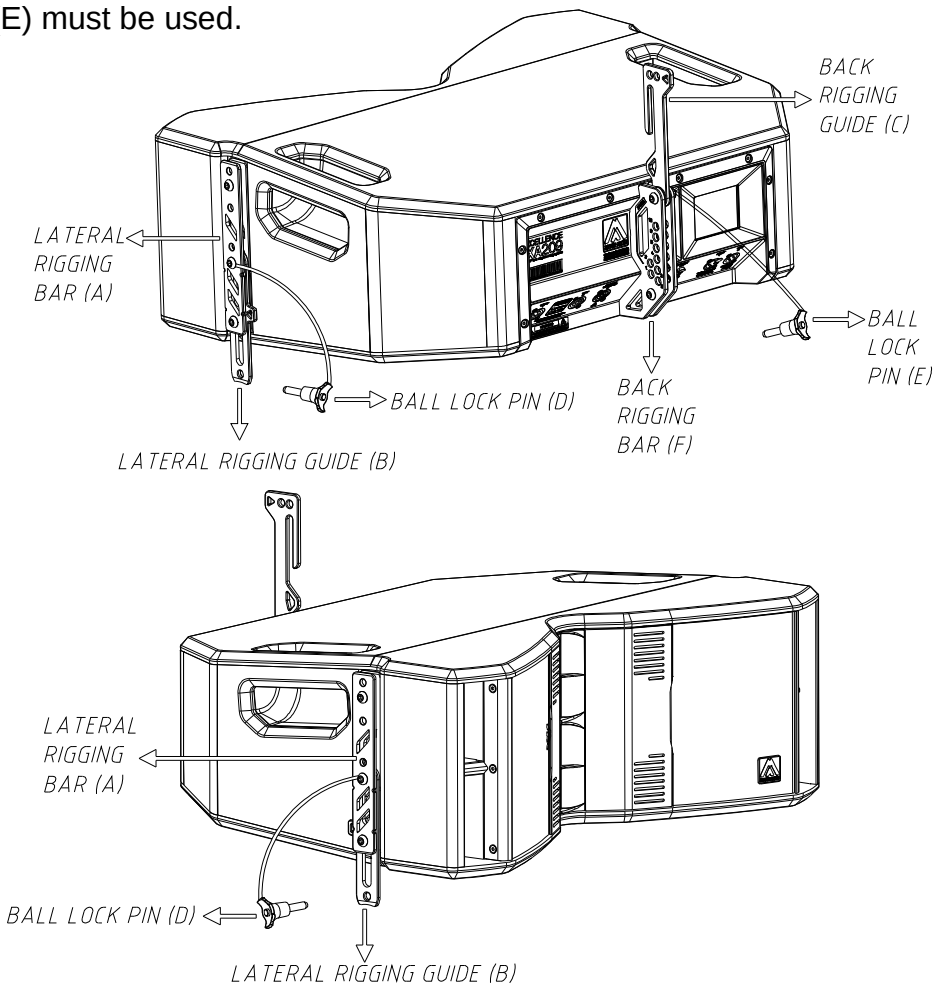

Fig.18. In-built flying hardware (lateral and back view)

To fly XA209 units use the BRAX stainless-steel frame. It includes a central bar to reinforce the whole structure. The bar includes several holes that provide a pickup point for the steel chain slings or the hoists. The pickup point chosen will determine the tilt angle of the whole array system. The BRAX also includes two lateral lock holes (G) to be attached to the XA209 lateral rigging bars (A) and one back lock hole (H) to be attached to the XA209 back rigging guide (C). To safely lock the frame, the BRAX front ball lock pins (I) and the back XA209 ball lock pin (E) must be used.

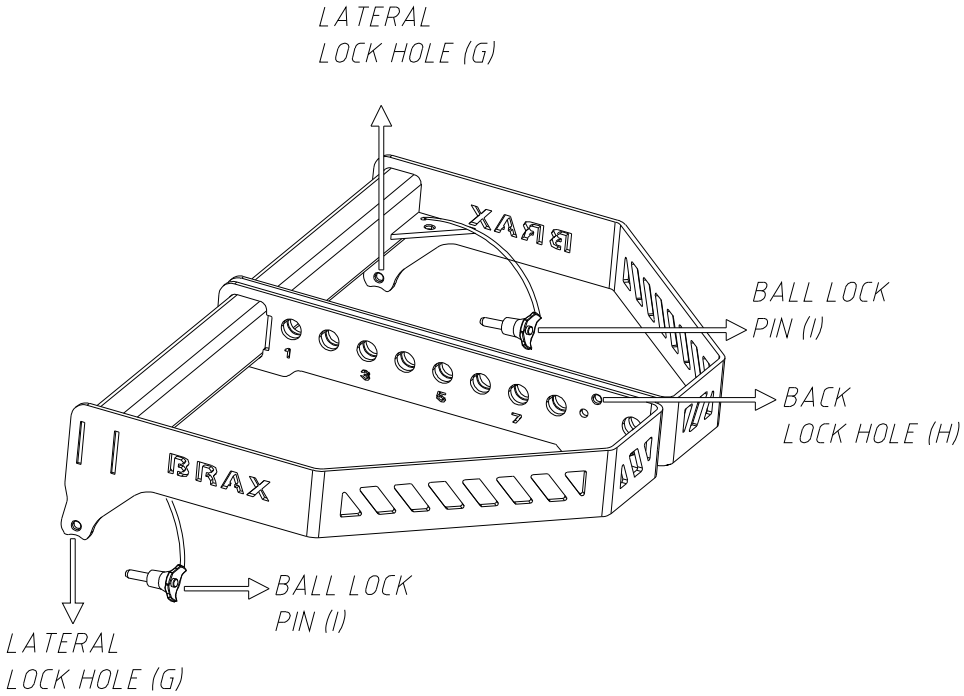

Fig.19. BRAX flying frame

The numbers on the central bar are those corresponding to Ease Focus calculations

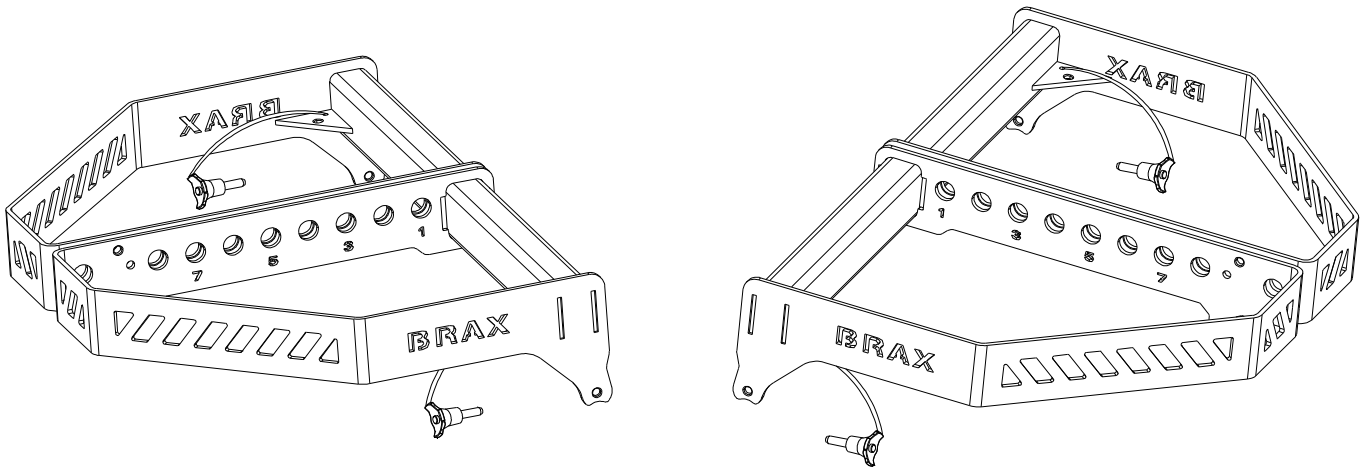

Fig.20. BRAX pin points

7.2 Vertical Flying

- On the store position, both the left and right XA209 lateral rigging guides (B) are hidden and locked with their ball lock pins (D).

- On its store position, the XA209 back rigging guide (C) is hidden.

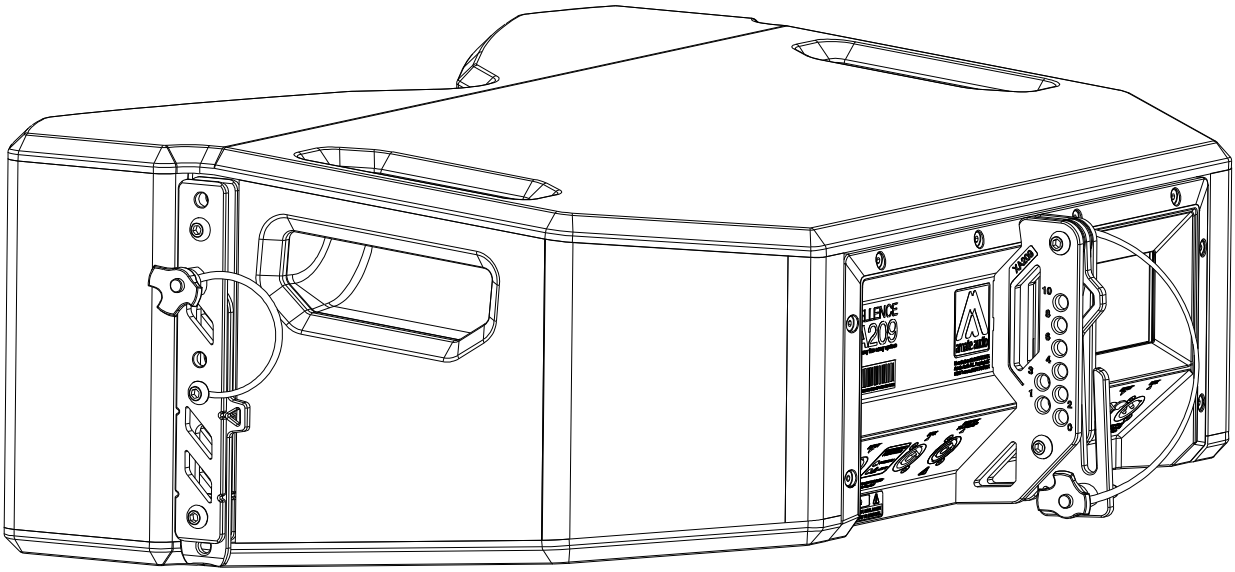

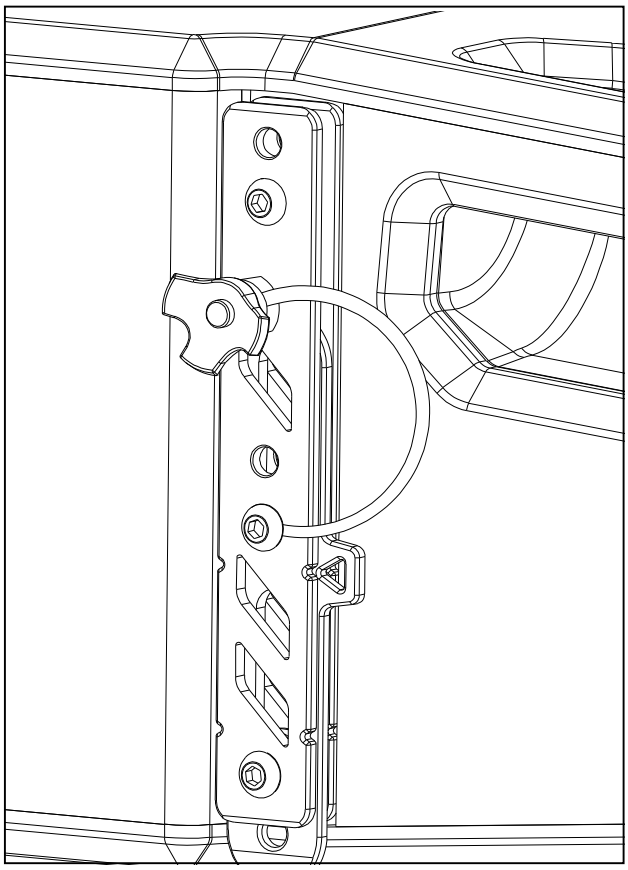

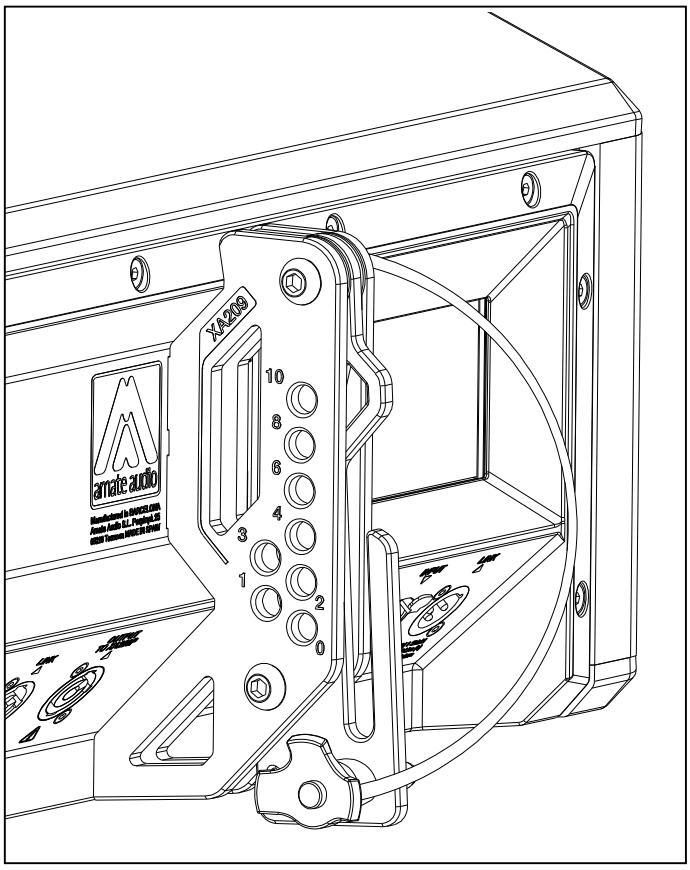

Fig. 21. Store lateral position Store back position

- Release the XA209 back ball lock pin (E) and slide up the back rigging guide (C).

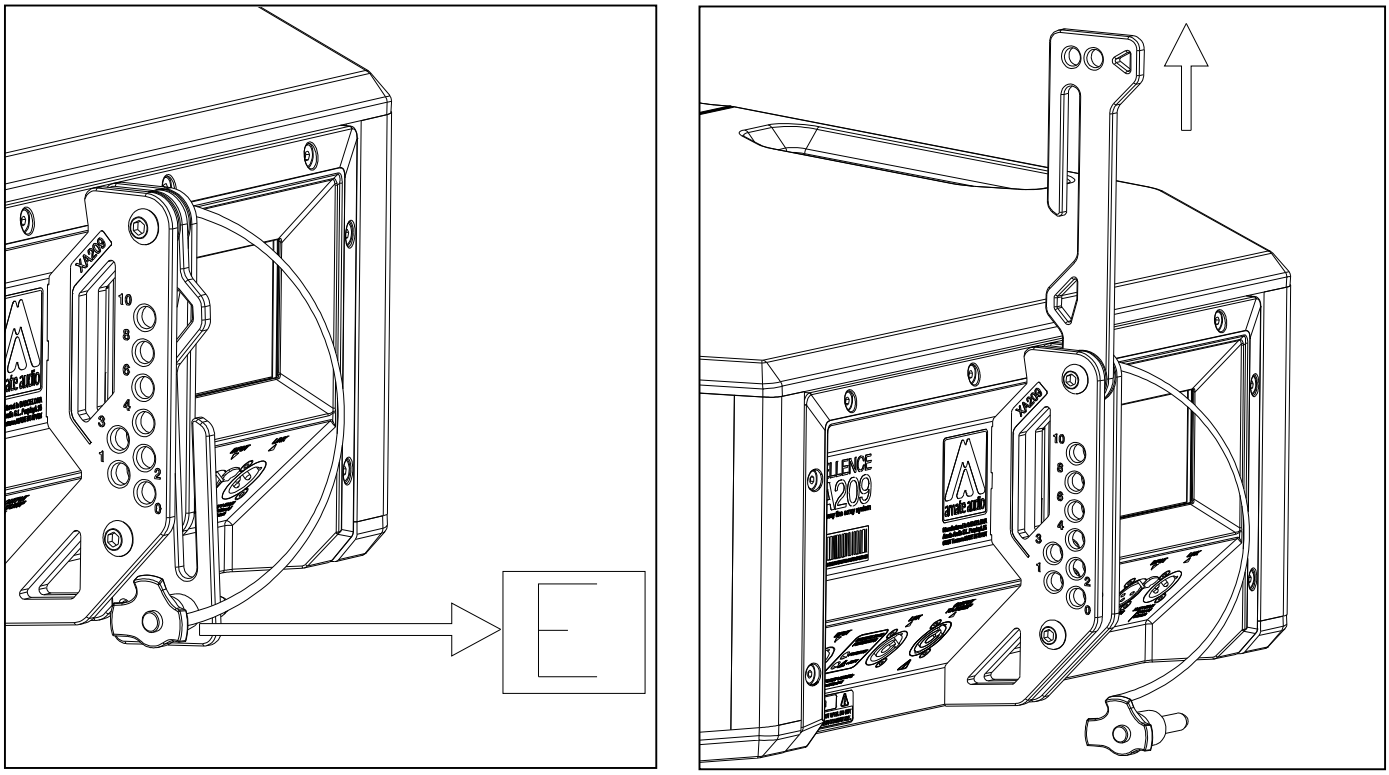

Fig. 22. Release of the back rigging guide of XA209 (first cabinet)

- Place the frame (BRAX) on top of the first XA209 cabinet. Insert the BRAX front lock holes (G) into the XA209 lateral rigging bars (A). Then, insert the back rigging guide of the XA209 (C) into the back lock hole (H) of the BRAX.

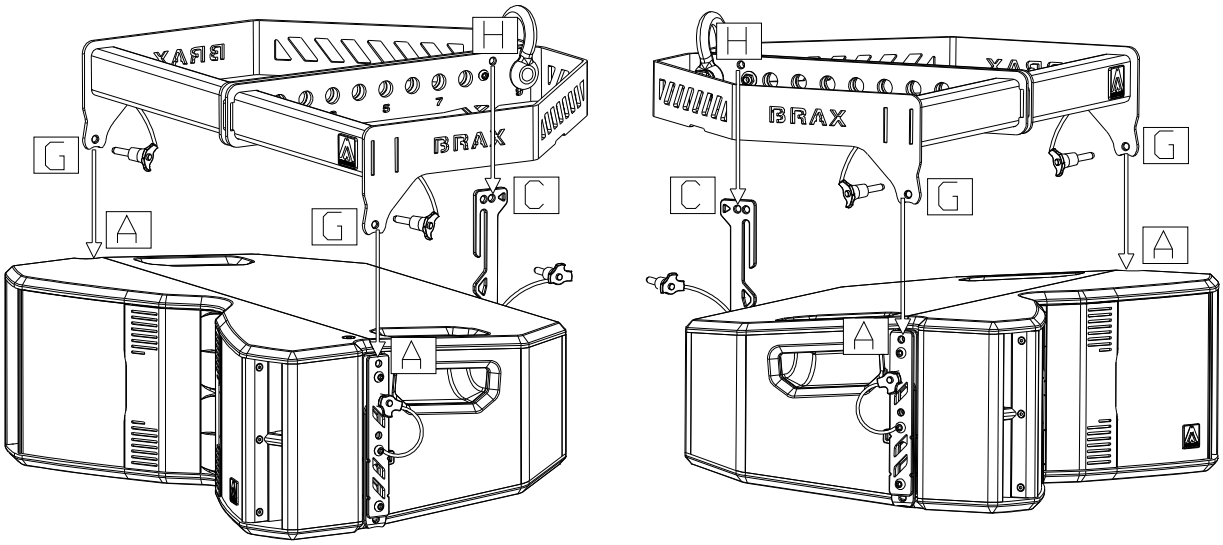

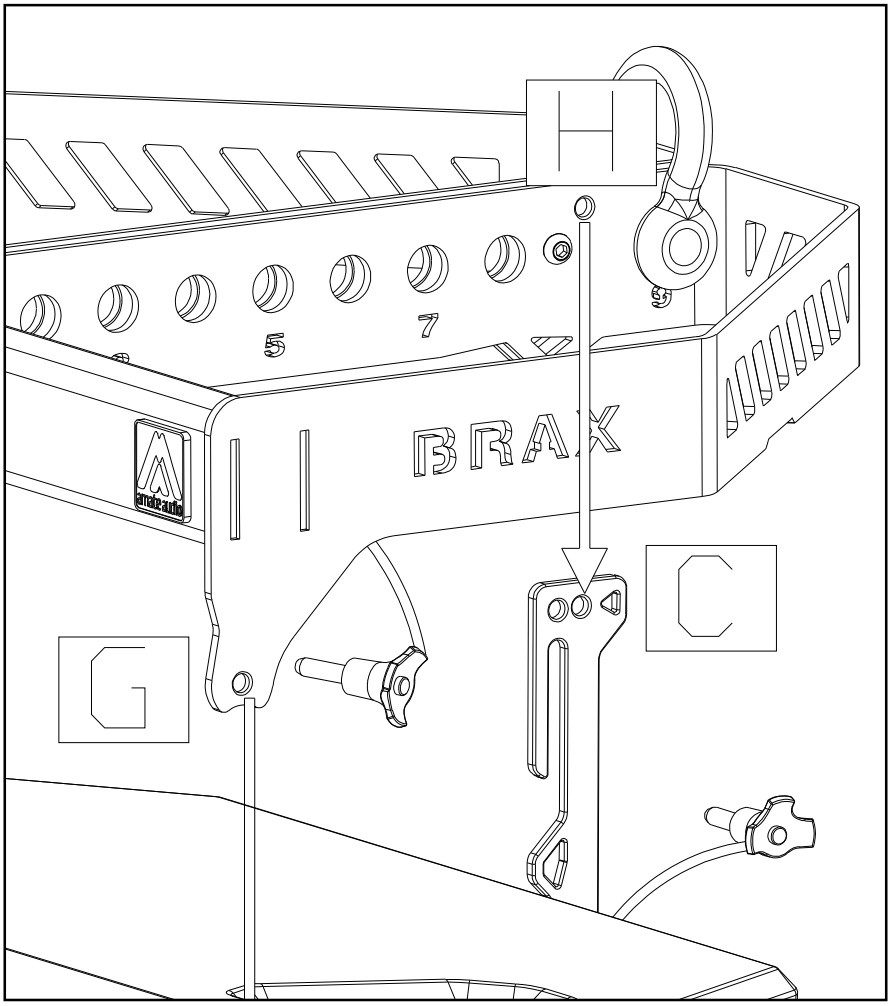

Fig.23. BRAX frame and XA209 cabinet (first box)

- Once the frame is received by the XA209, use the provided ball lock pins to attach the frame to the cabinet (front pins (I) / back pin (E).

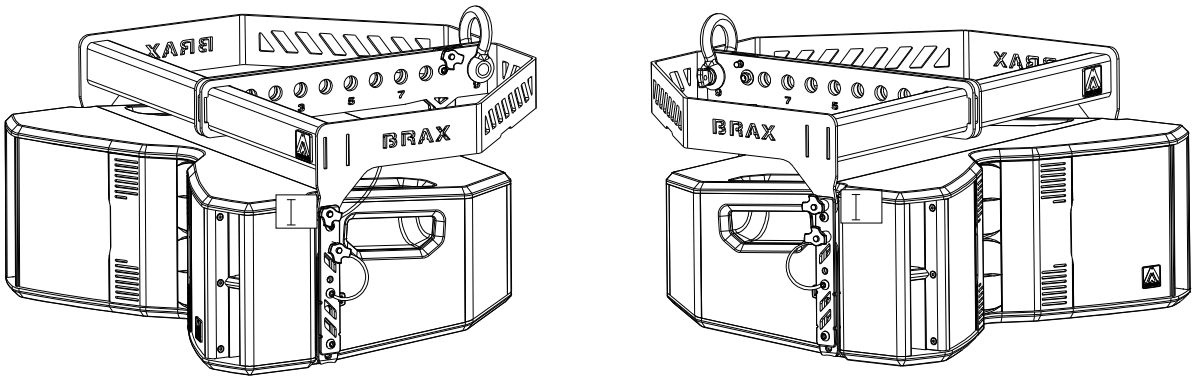

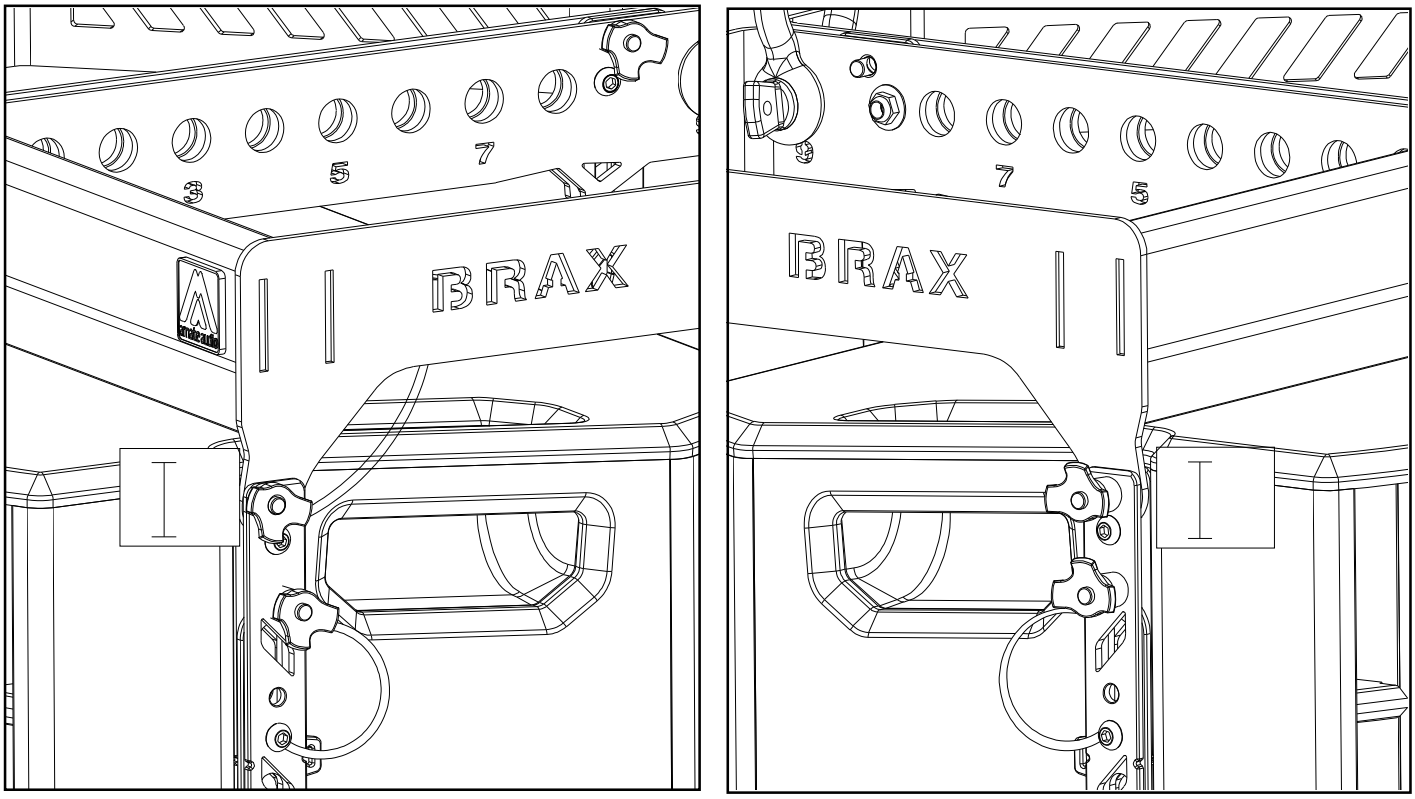

Fig.24. BRAX attached to XA209 (first cabinet). Front pins (I)

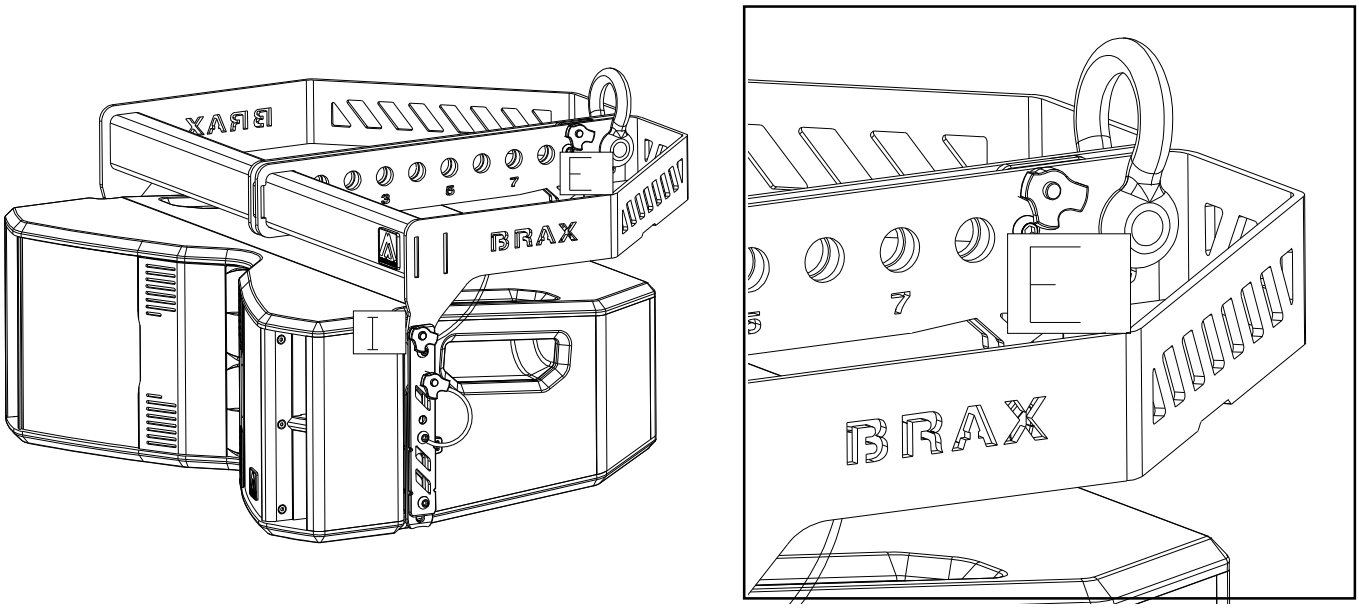

Fig.25. BRAX attached to XA209 (first cabinet). Back pins (E)

- To lock the rear, make sure that the back rigging guide of the XA209 (C) is positioned correctly through the back guide screw (J).

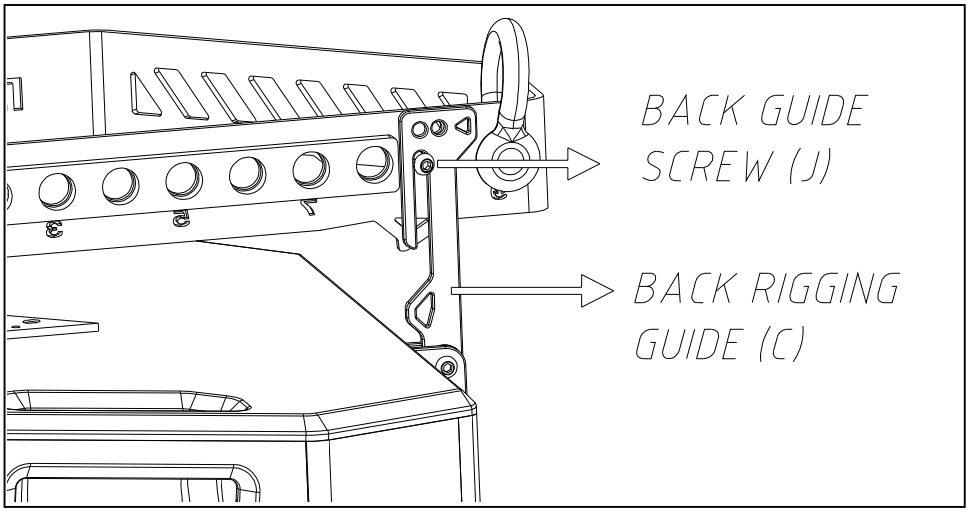

Fig. 26. BRAX attached to XA209 (first cabinet). Back rigging guide (C) through the back guide screw (J)

- To place the successive boxes, release the ball lock pins from the left and right side bars of the upper XA209 box (D). The inner guides will drop down.

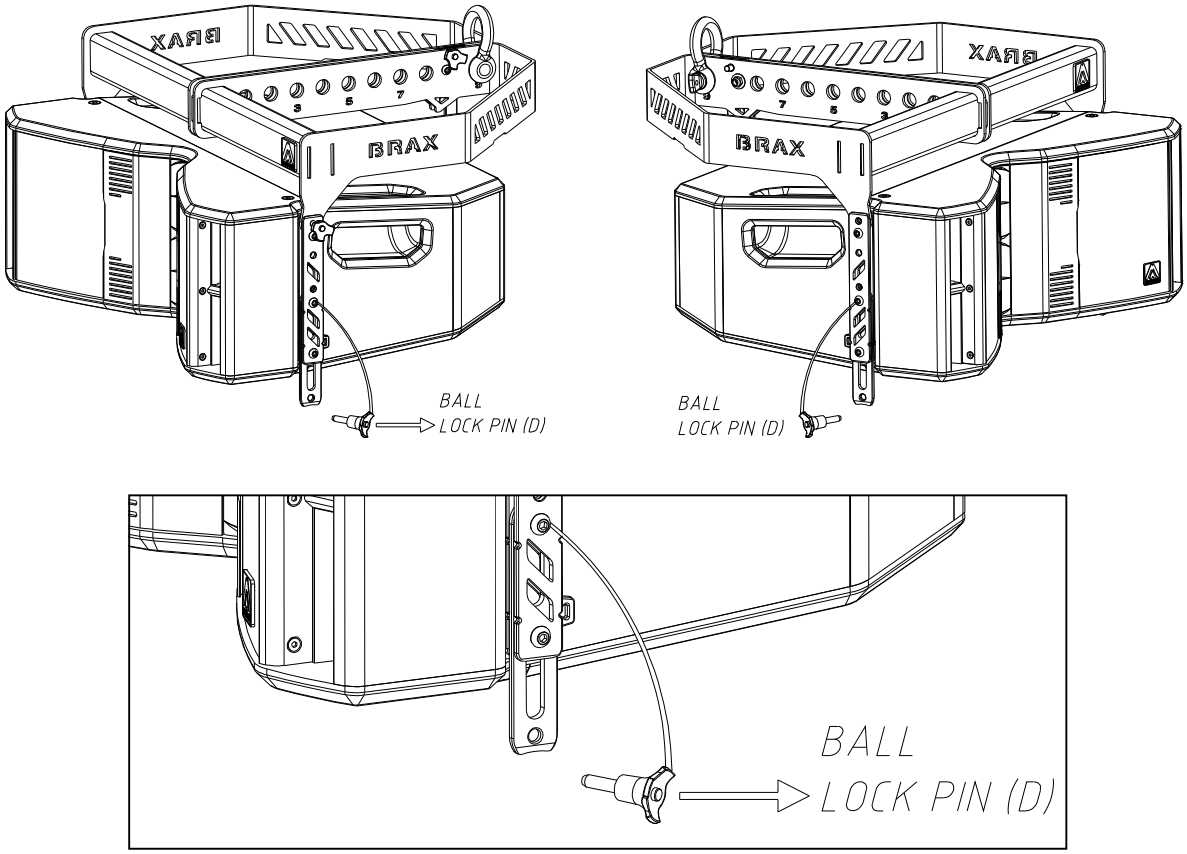

Fig. 27. XA209 lateral guides slide (upper box)

- Release the back pin (E) and slide up the back guide of the XA209 cabinet that you want to place in the lower position.

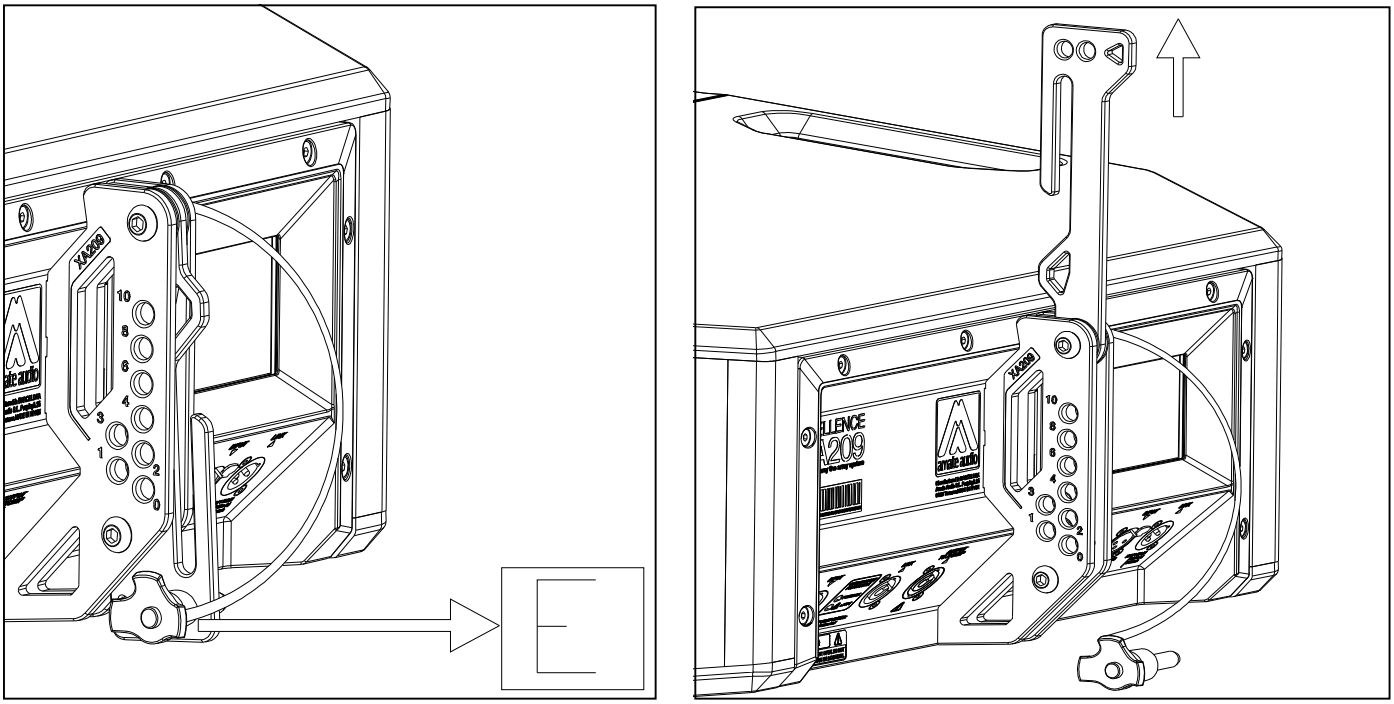

Fig. 28. XA209 back guide slide (lower box)

- Place the XA209 lower box under the XA209 upper box. First, join the two front side rigging guides of the upper XA209 cabinet (B) with the side rigging bars of the lower XA209 cabinet (K).

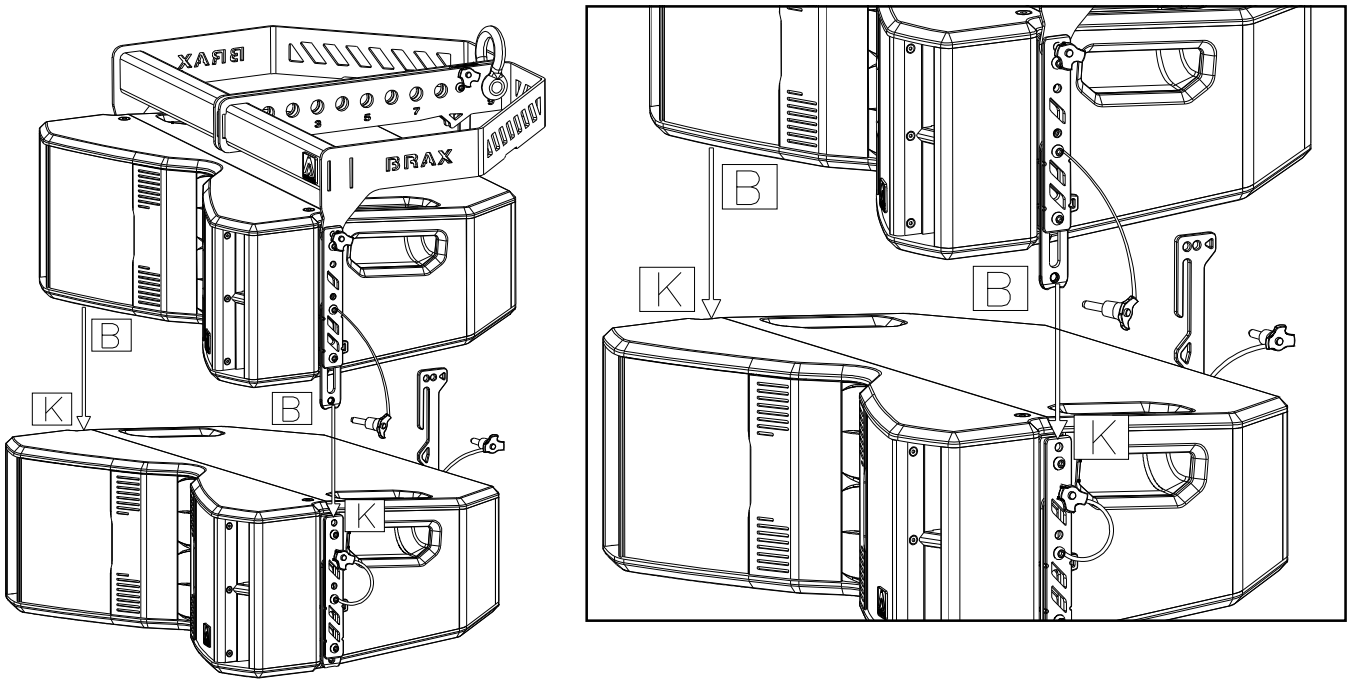

Fig. 29. XA209 box (upper) and XA209 box (lower). Front part

- Once the upper XA209 box is attached to the lower XA209 box, place the front side pins of the upper XA209 box (D).

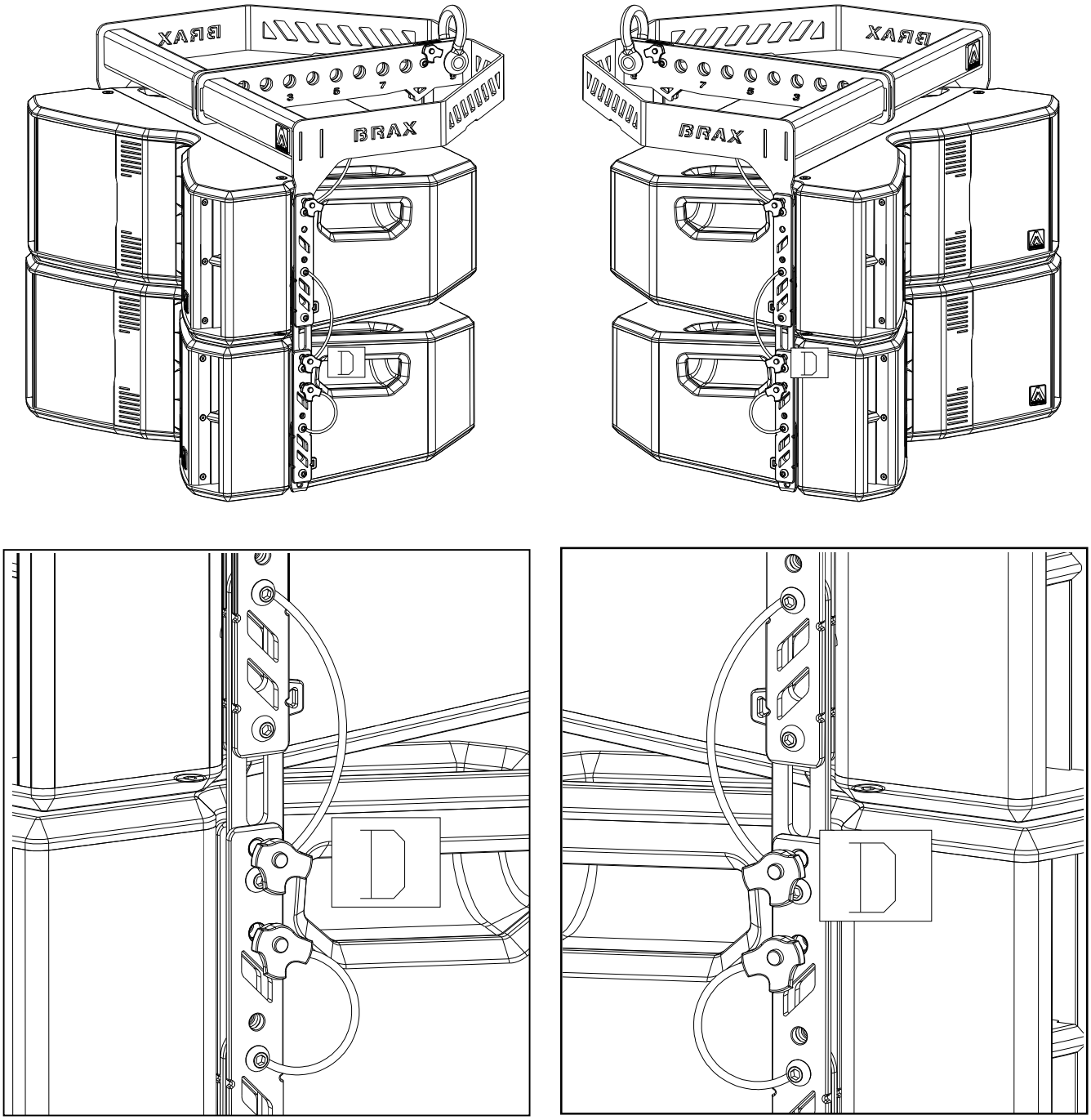

Fig. 30. XA209 box (upper) and XA209 box (lower). Front pins

- Regarding the rear, join the back rigging guide of the lower XA209 box (L) to the back rigging bar of the upper XA209 box (F). Be sure to correctly position the lower box back guide through the upper box back screw (M).

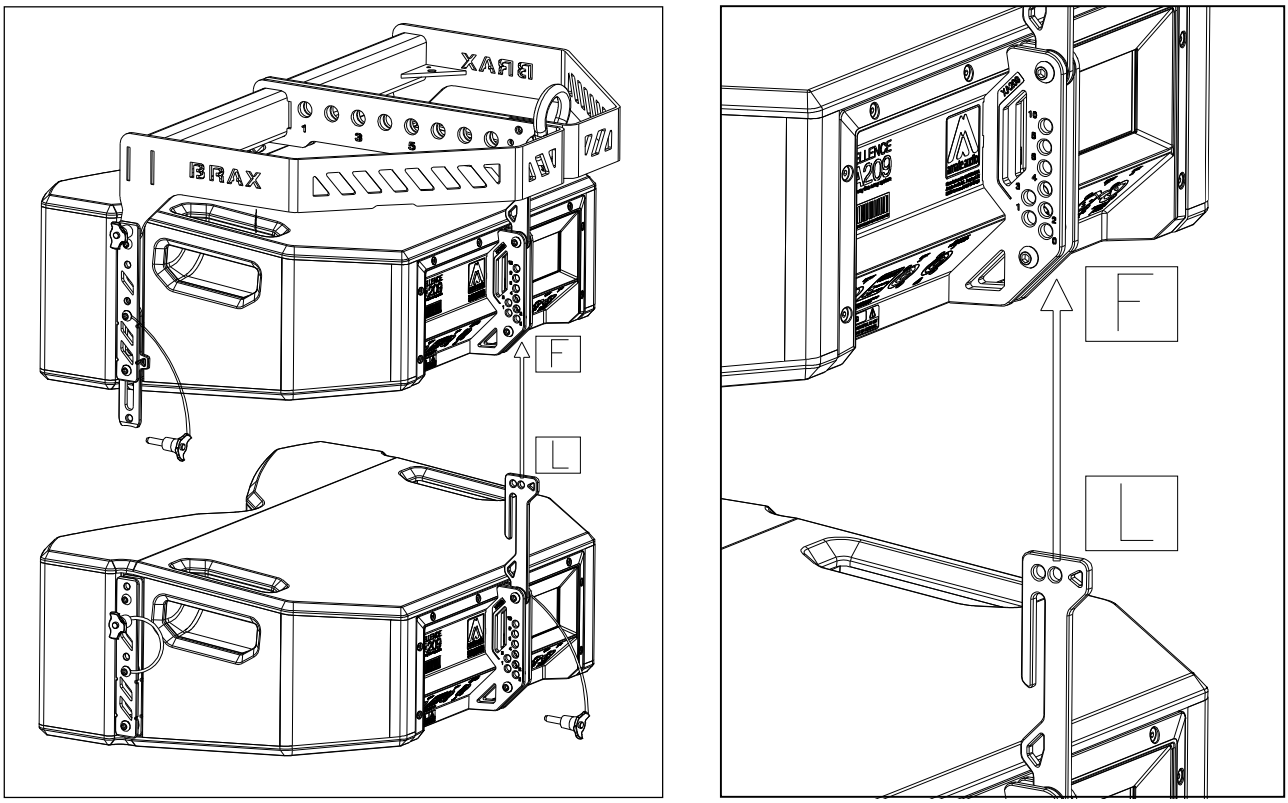

Fig. 31. XA209 box (upper) and XA209 box (lower). Rear part

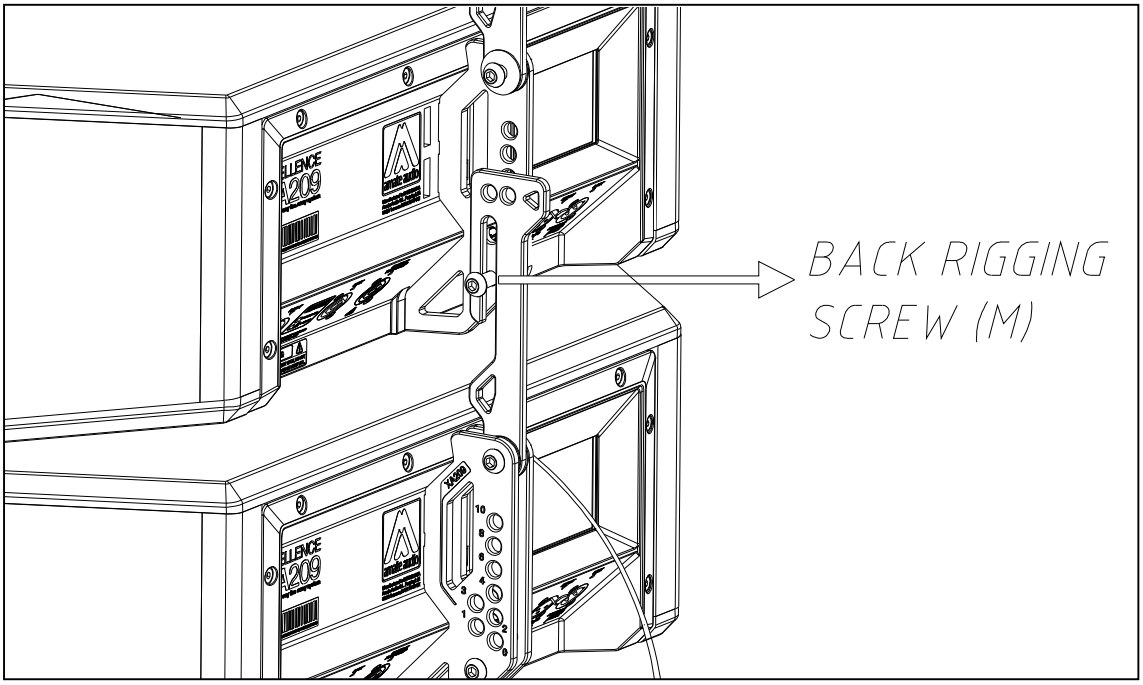

Fig. 32. XA209 box (upper) and XA209 box (lower). Back rigging guide through the back guide screw (M)

- Choose the desired angle and place the rear pin.

0º

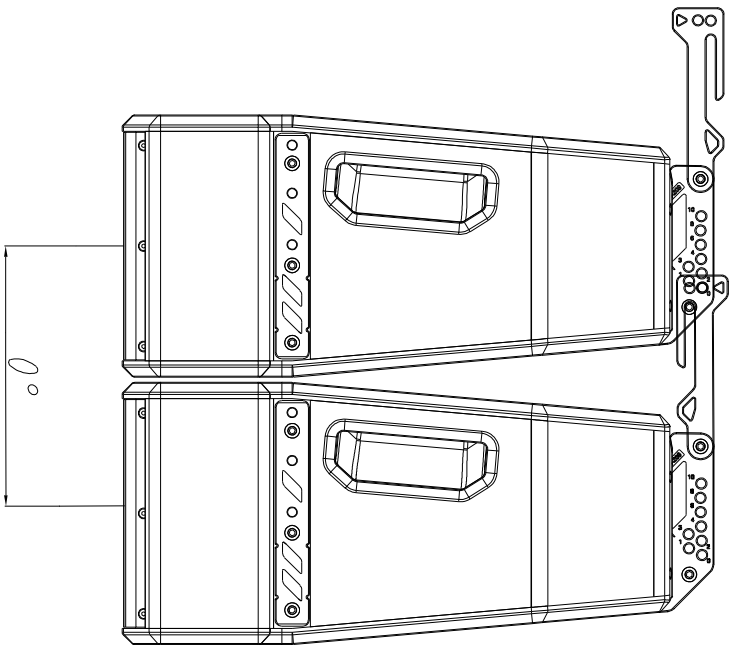

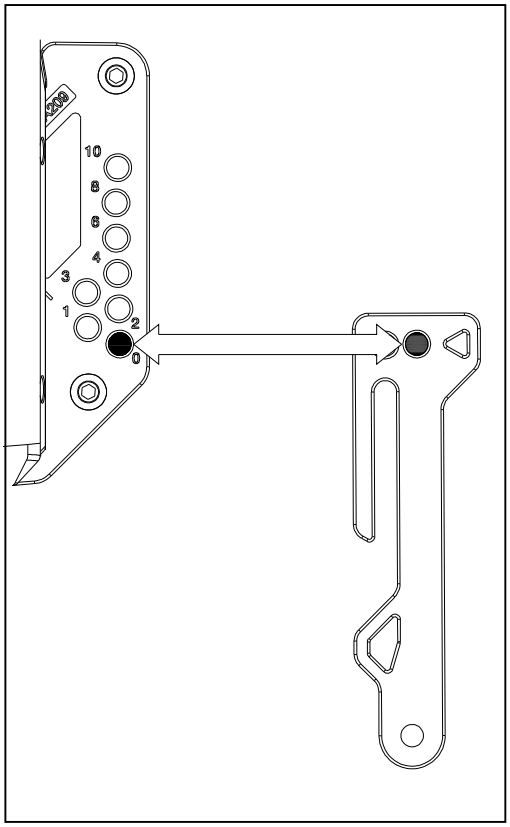

1º

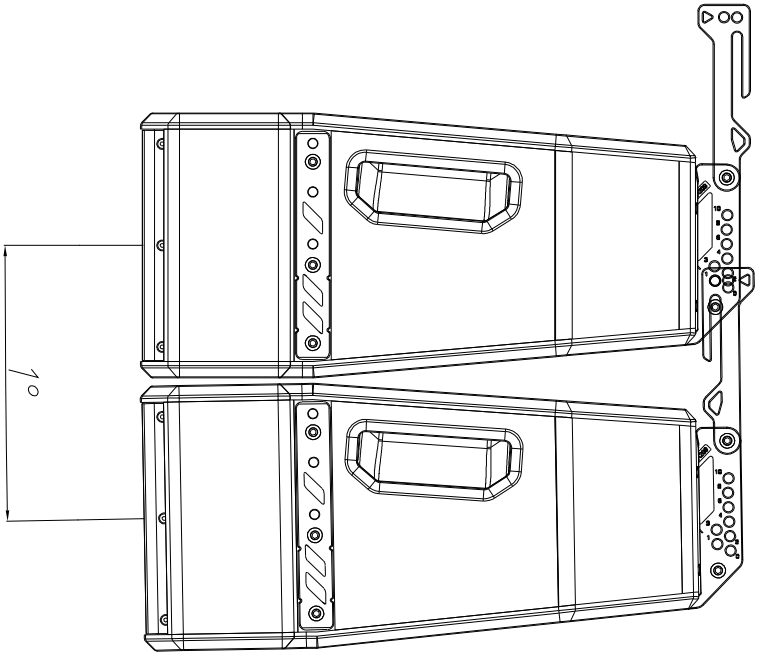

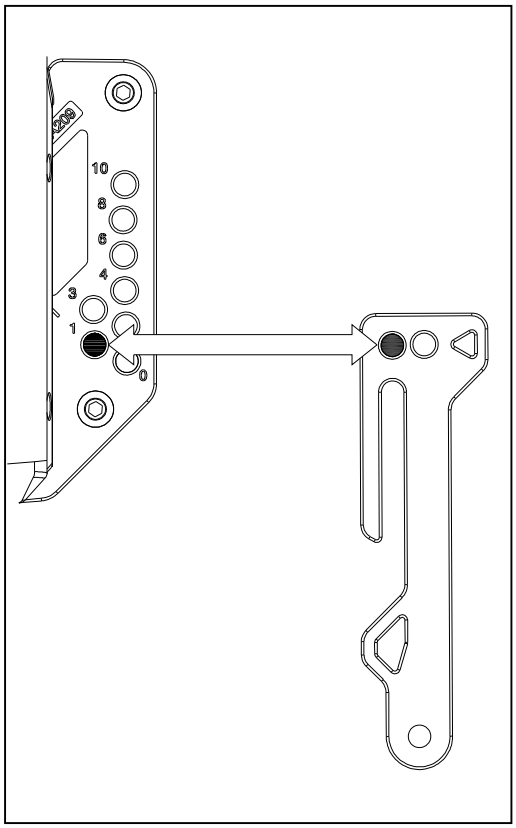

2º

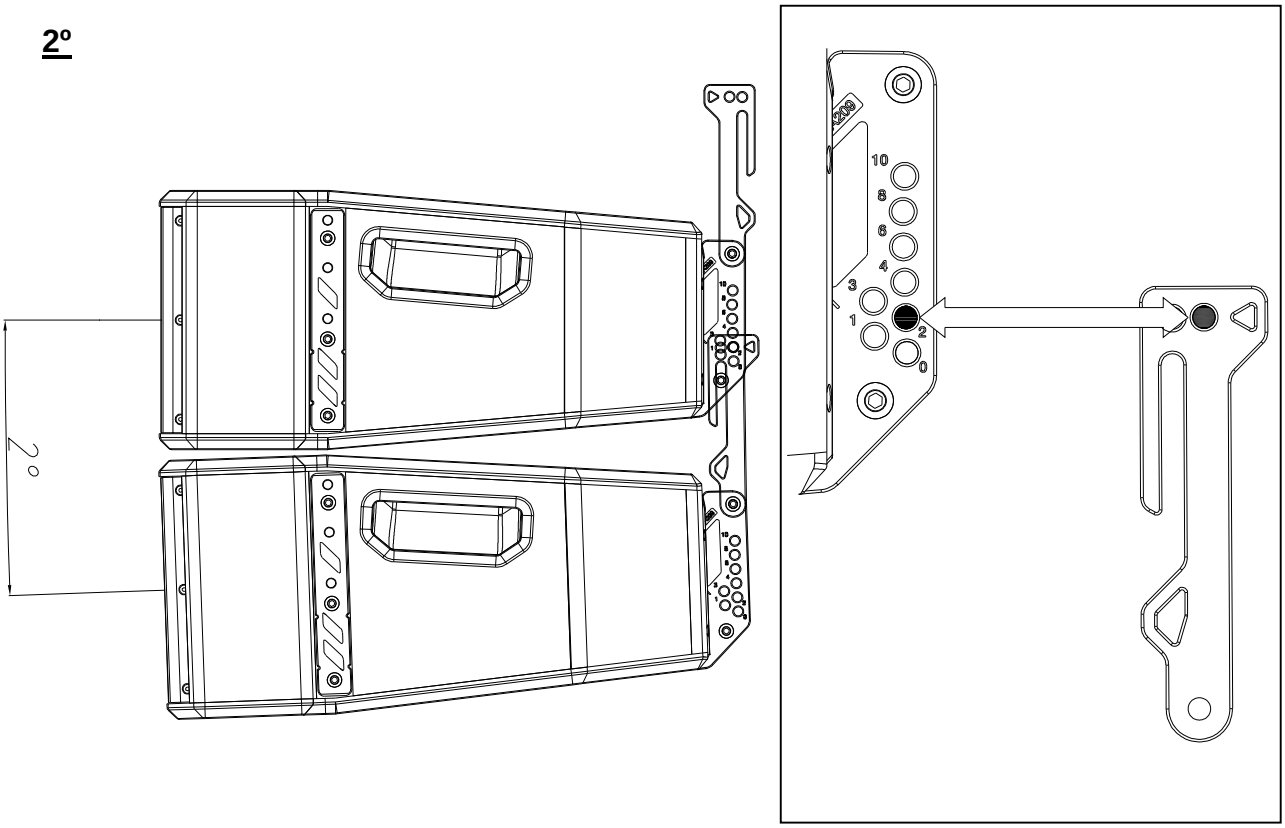

3º

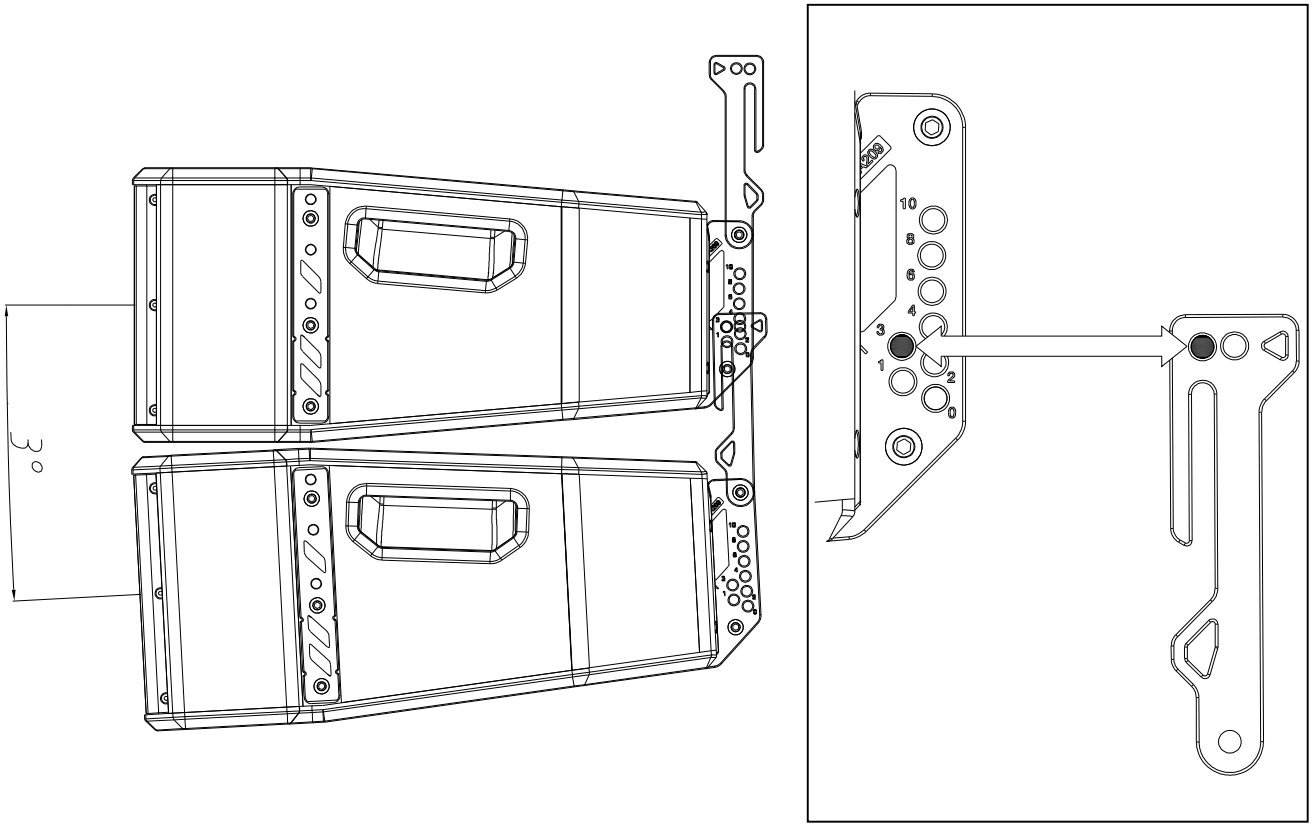

4º

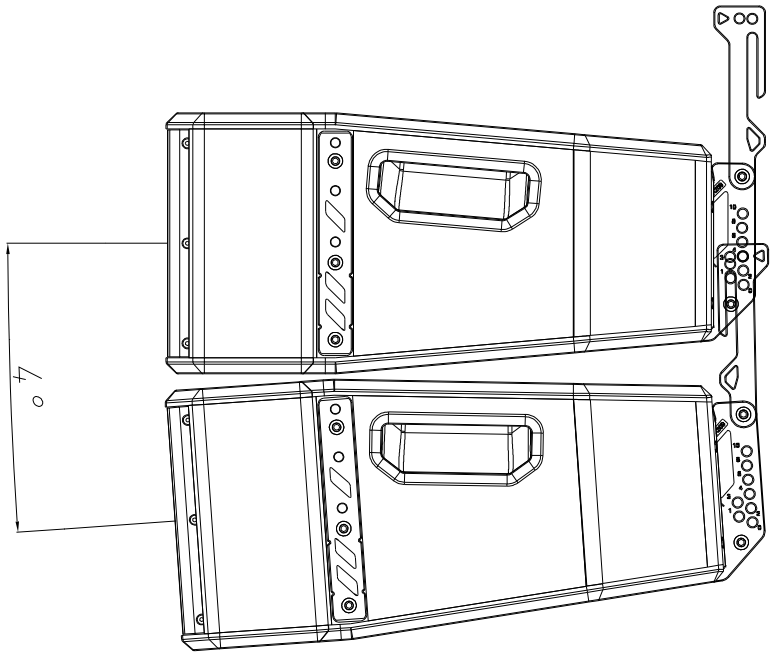

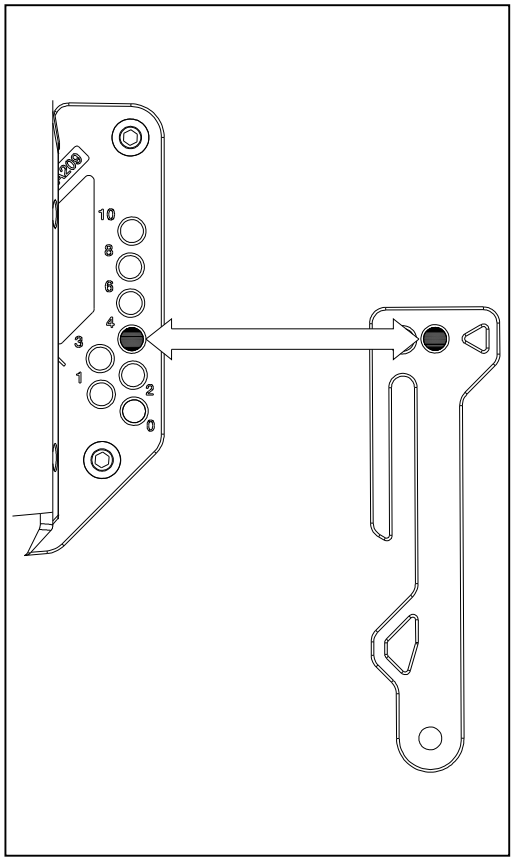

6º

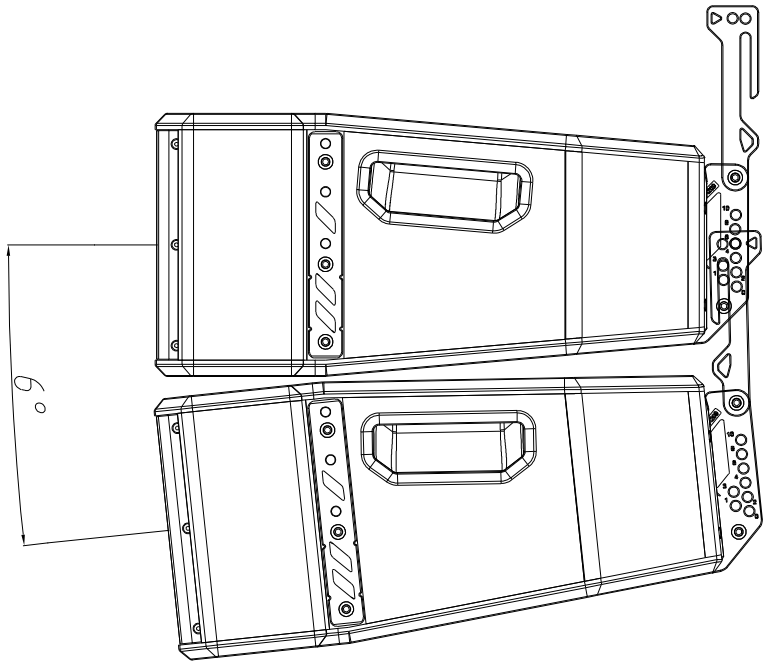

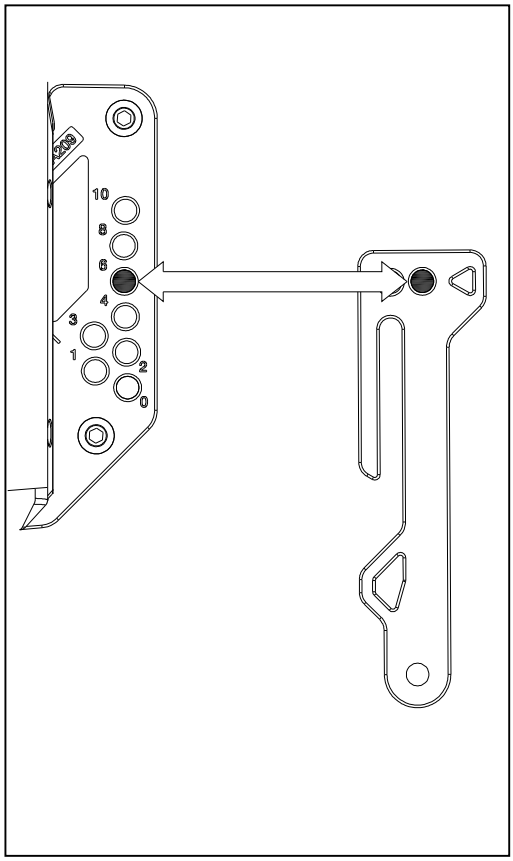

8º

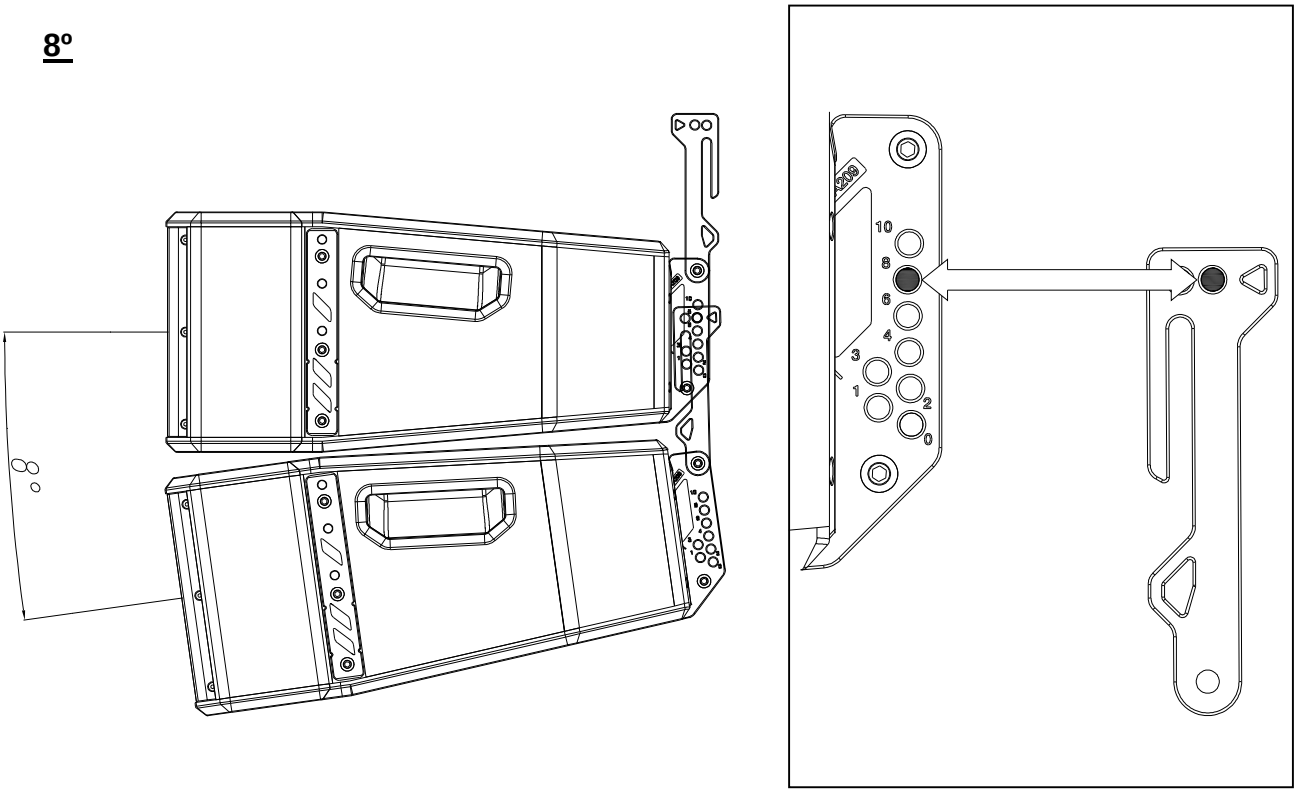

10º

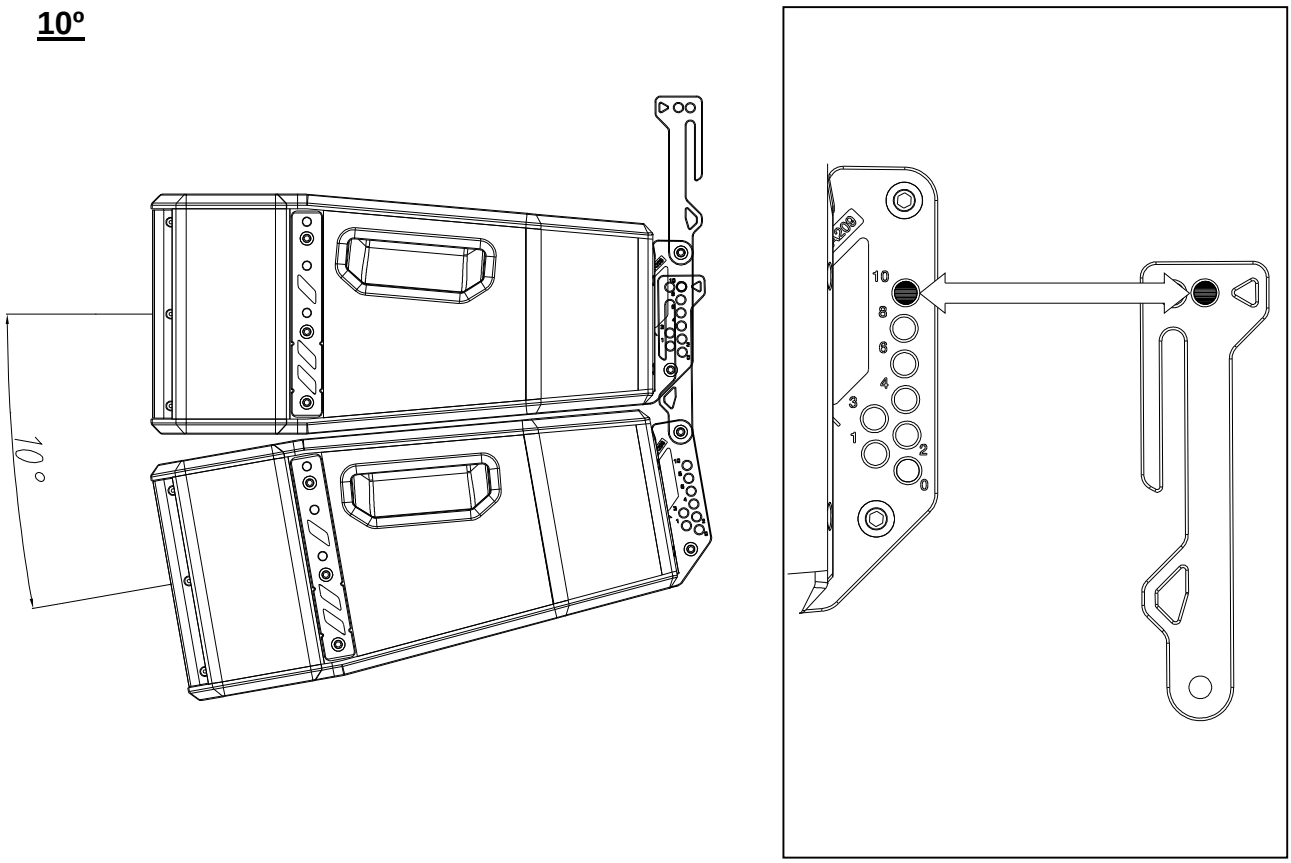

Fig. 33. Choose the desired angle

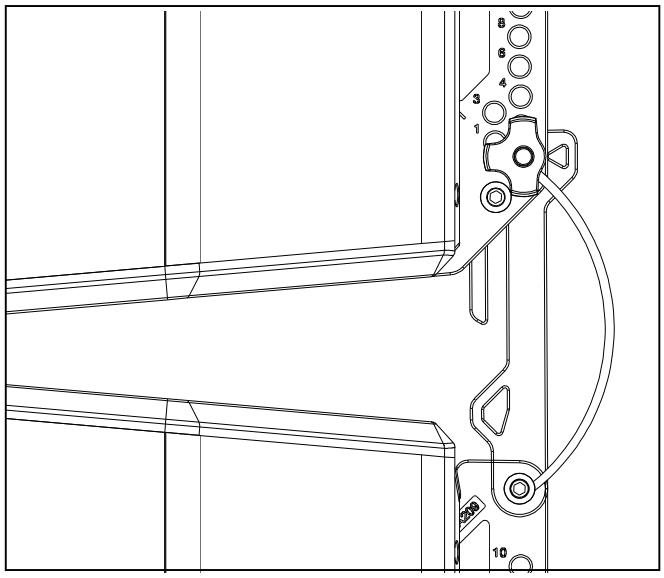

Fig. 34. Place the ball lock pin

- Proceed sequentially to add more units of the XA209.

7.3 Vertical flying with XA211

The XA209 cabinets are designed to be flown alongside the XA211 without the need for optional accessories. **The XA209 cabinets should always be placed below the XA211 cabinets.**

- To place the first unit of XA209 below the XA211, release the ball lock pins from the left and right side bars of the XA211 box (D). The inner guides will drop down.

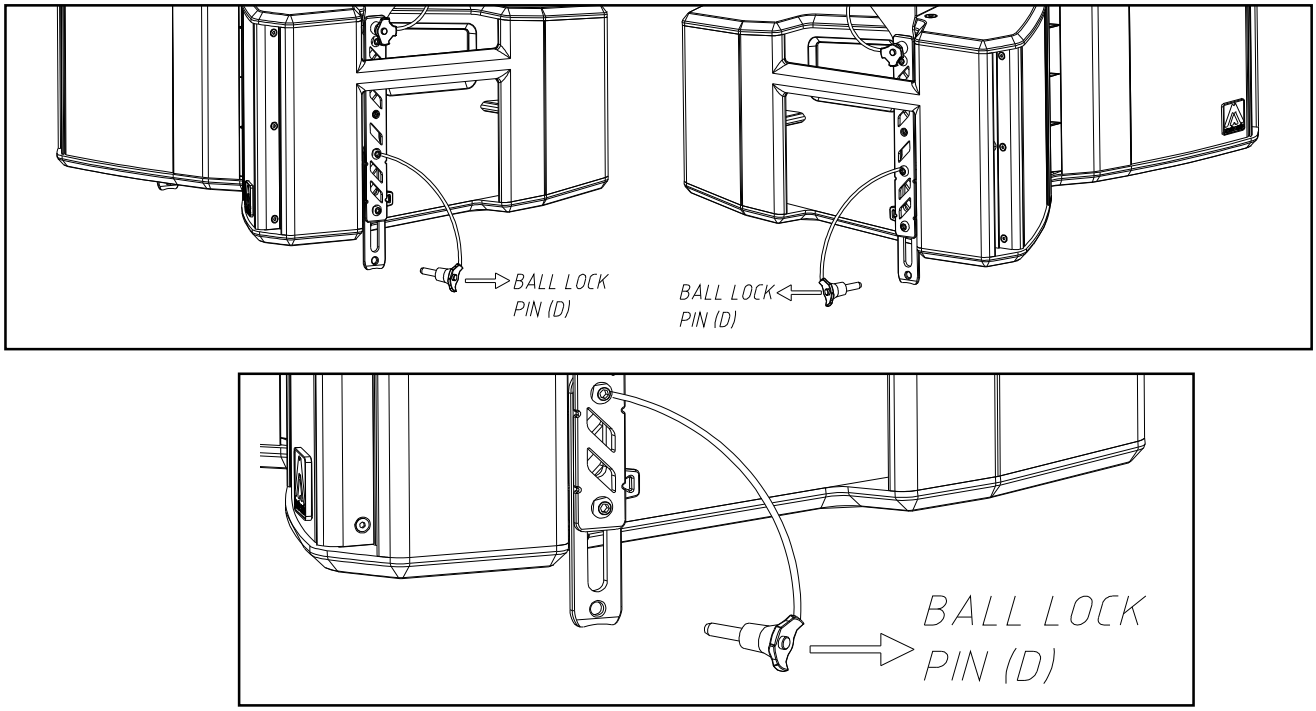

Fig. 35. XA211 lateral guides slide

- Release the back pin (E) and slide up the back guide of the XA209 cabinet.

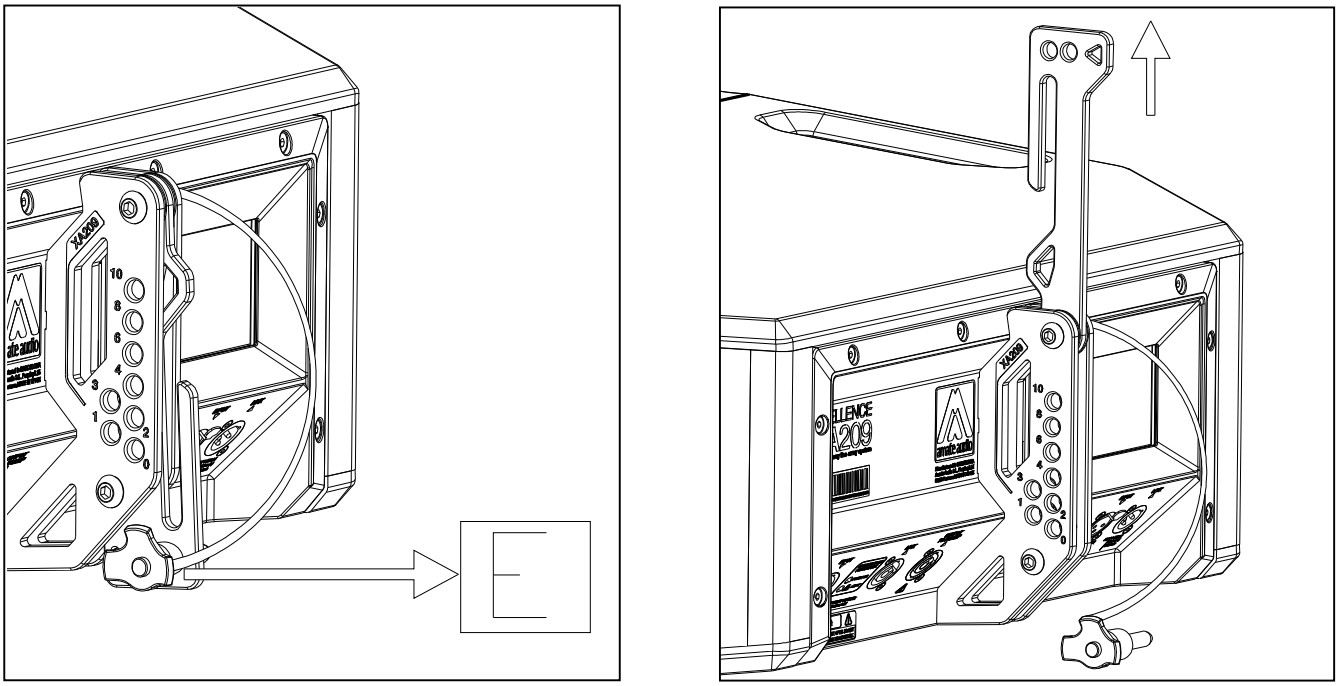

Fig. 36 XA209 back guide slide

- Place the XA209 box under the XA211 box. First, join the two front side rigging guides of the XA211 cabinet (B) with the side rigging bars of the XA209 cabinet (K).

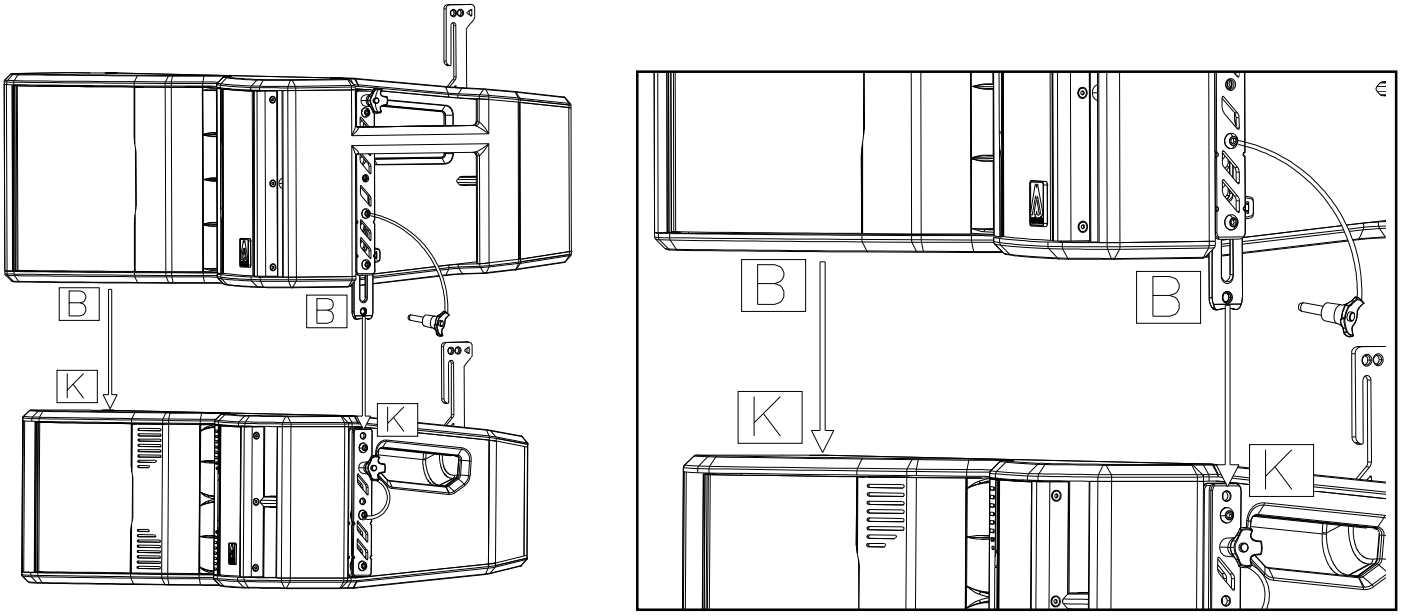

Fig. 37. XA211 box and XA209 box. Front part .

- Once the XA211 box is attached to the XA209 box, place the front side pins of the XA211 box (D)

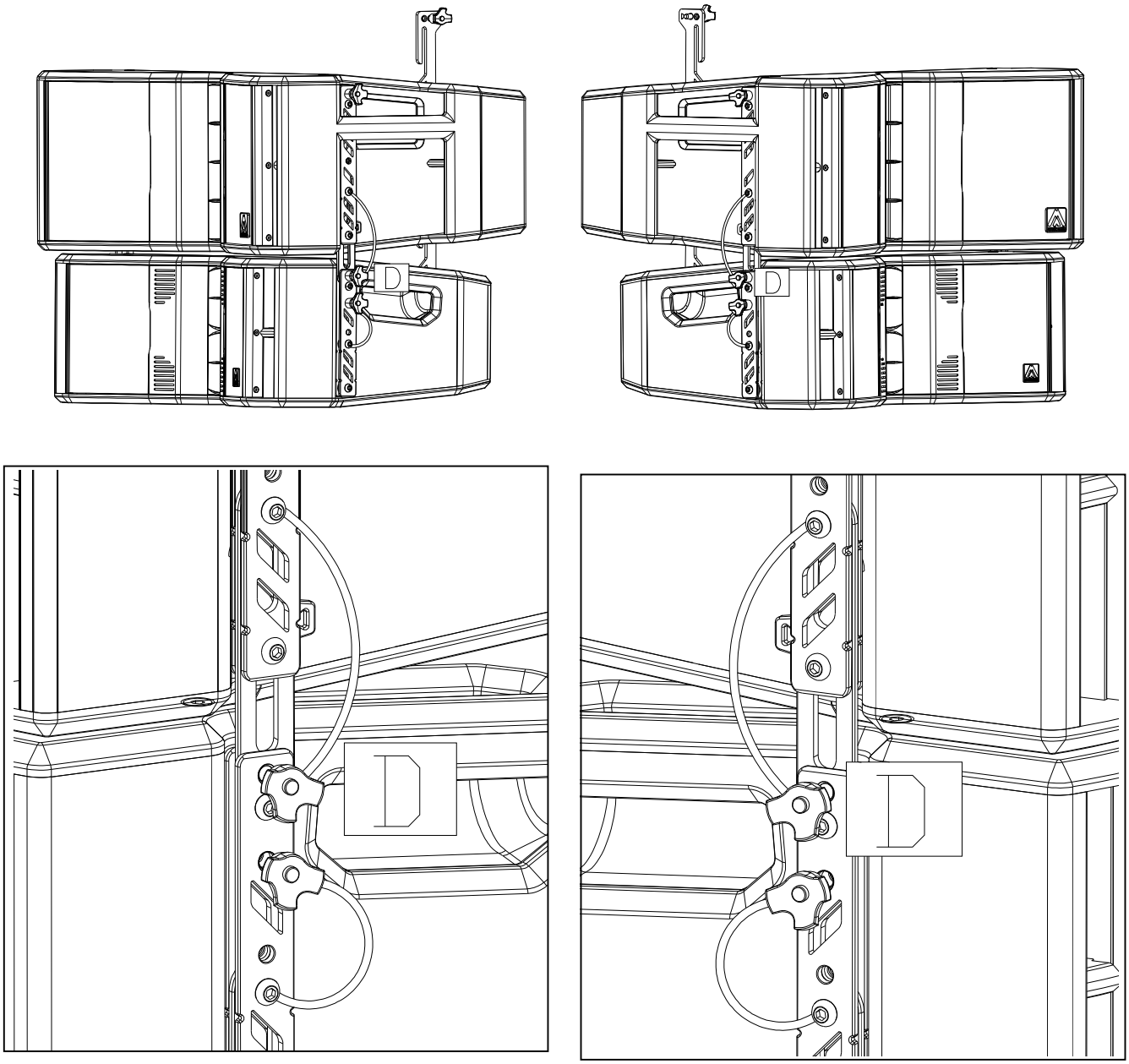

Fig. 38. XA211 box and XA209 box. Front pins

- Regarding the rear, join the back rigging guide of the XA209 box (L) to the back rigging bar of the XA211 box (F). Be sure to correctly set the XA209 back guide through the XA211 back screw (M).

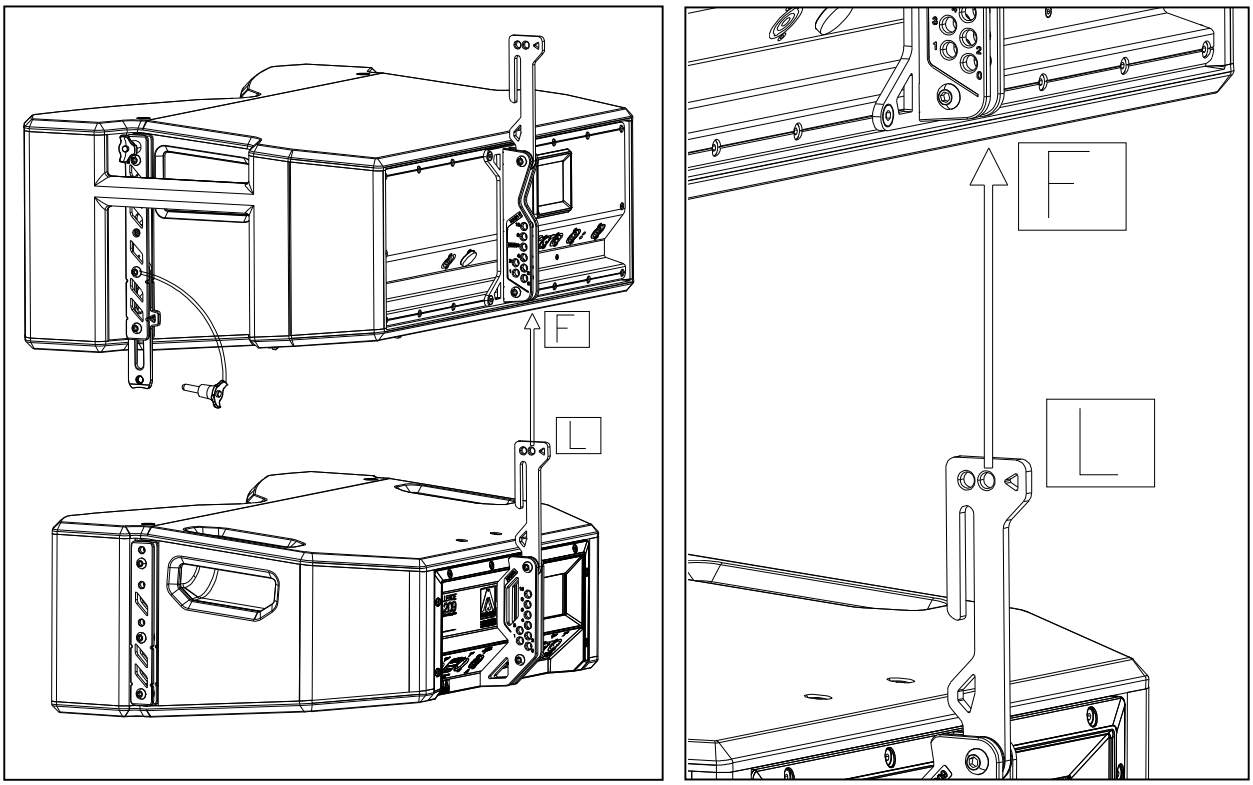

Fig. 39. XA211 box and XA209 box. Rear

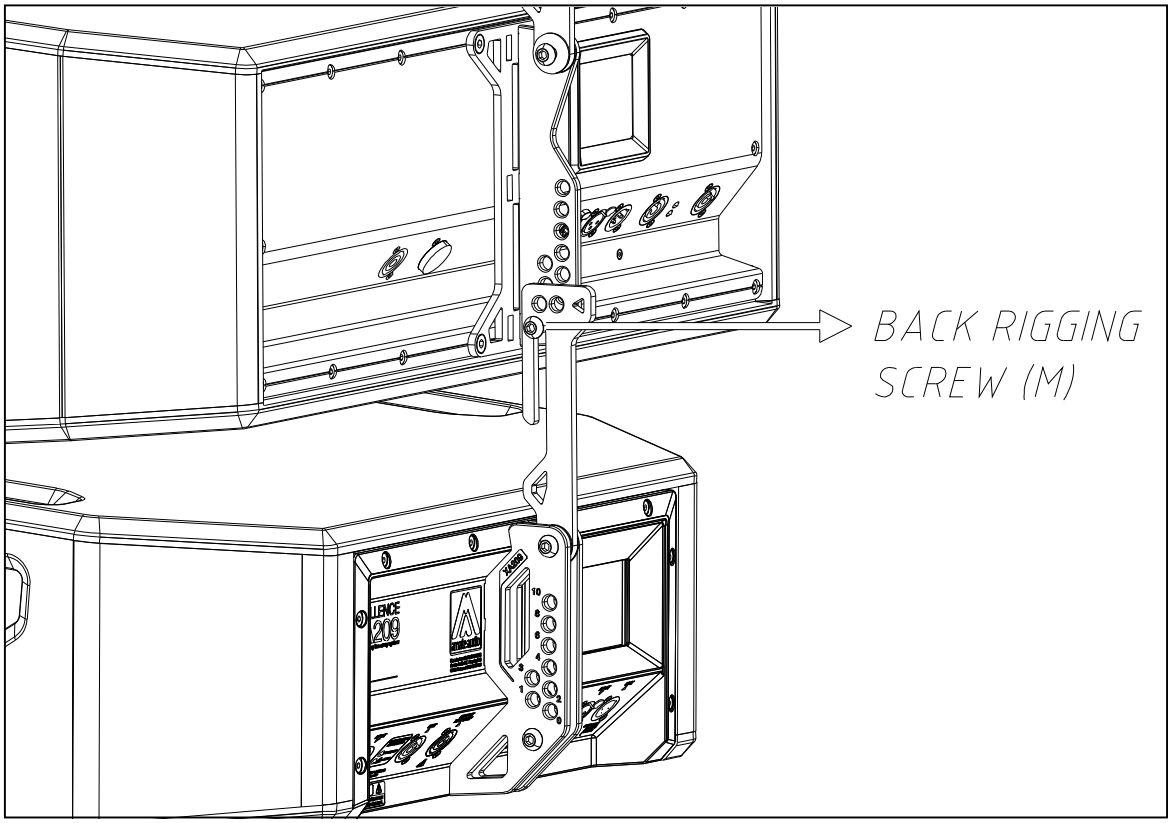

Fig. 40. XA211 box (upper) and XA209 box (lower). XA209 back rigging guide through the XA211 back guide screw (M)

- Choose the desired angle and place the rear pin.

0º

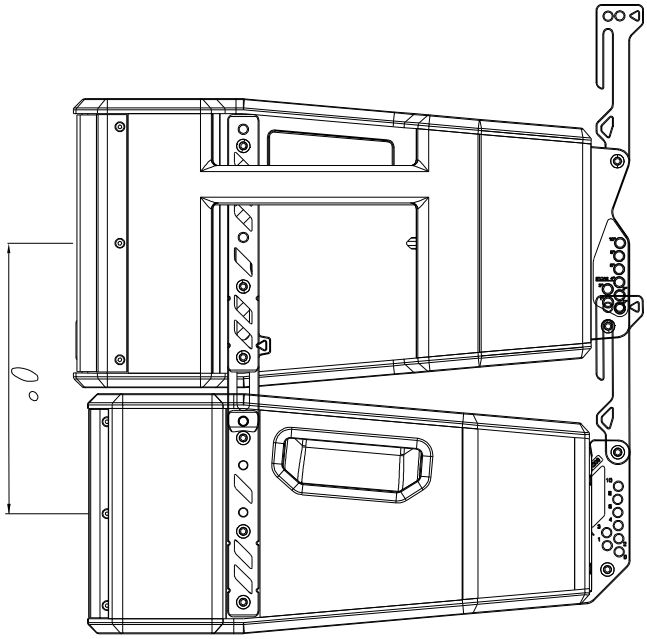

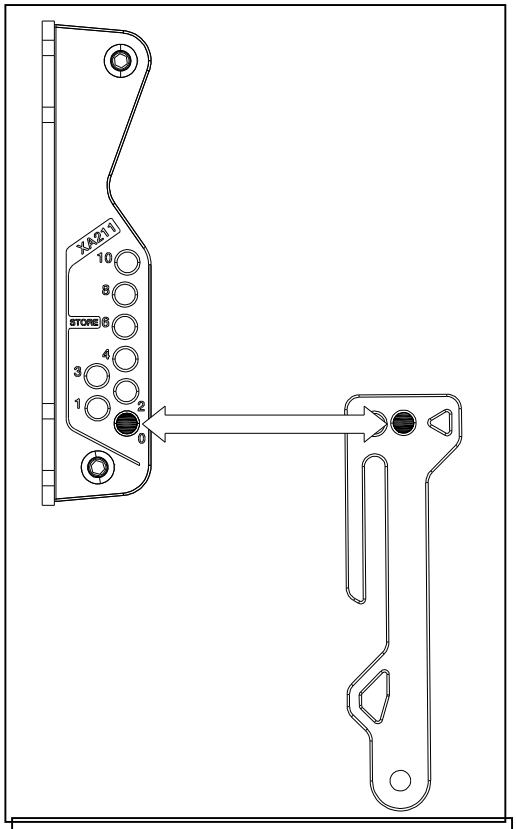

1º

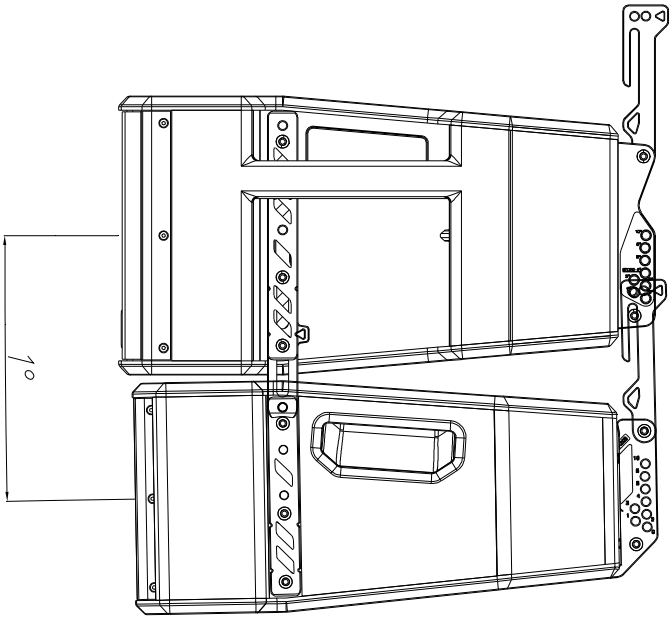

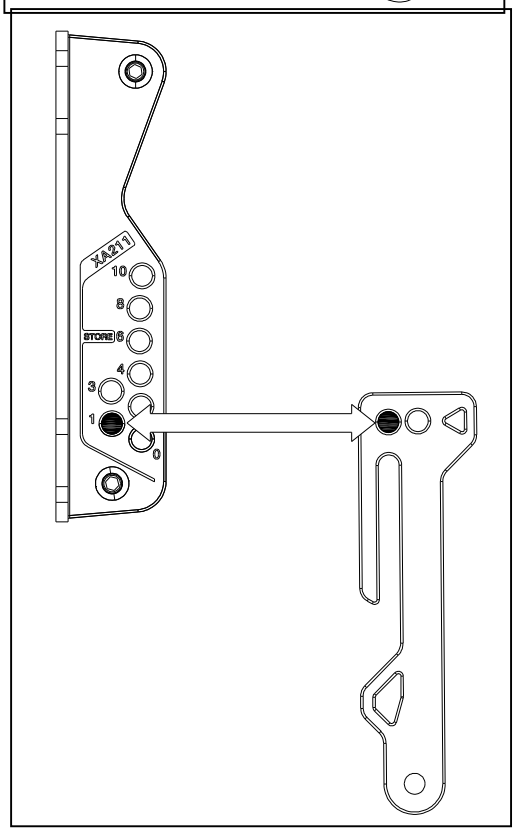

2º

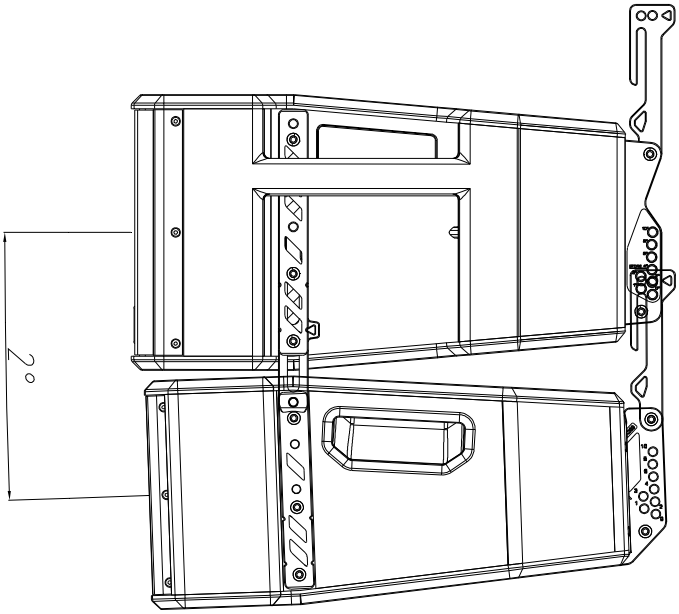

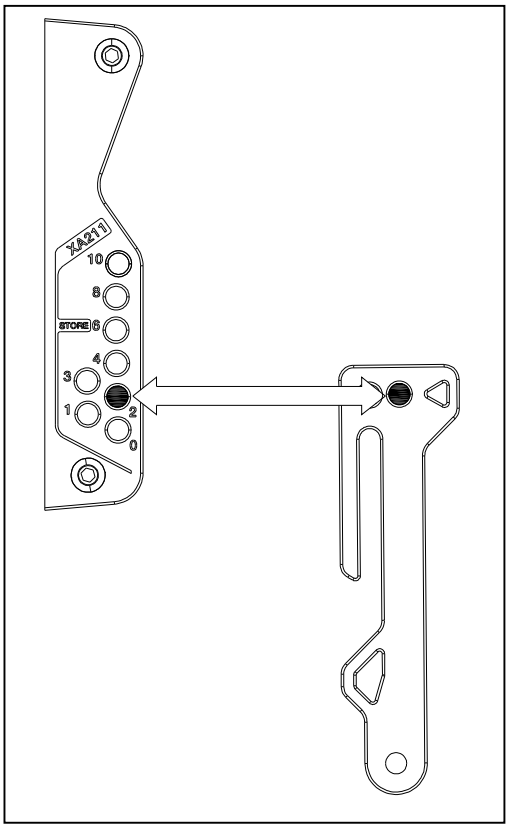

3º

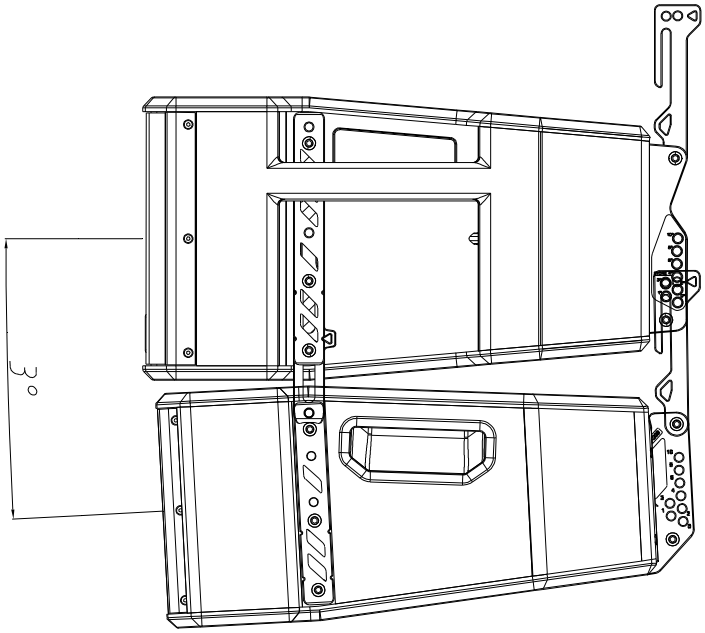

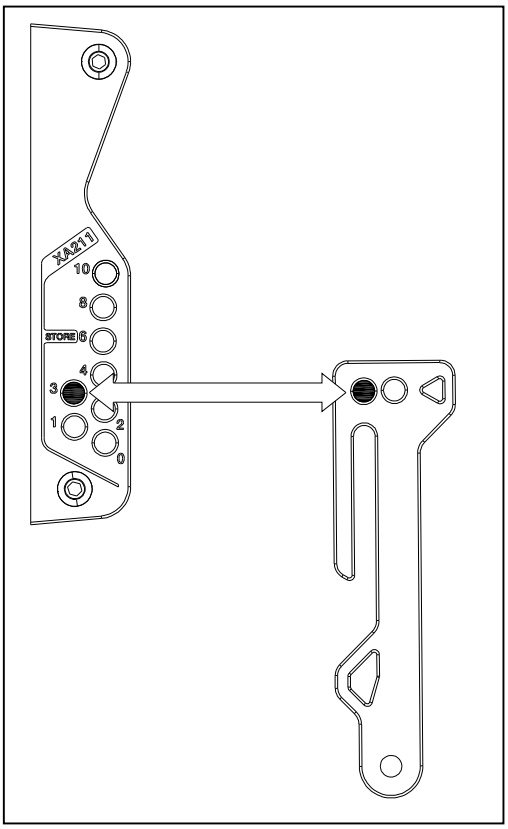

4º

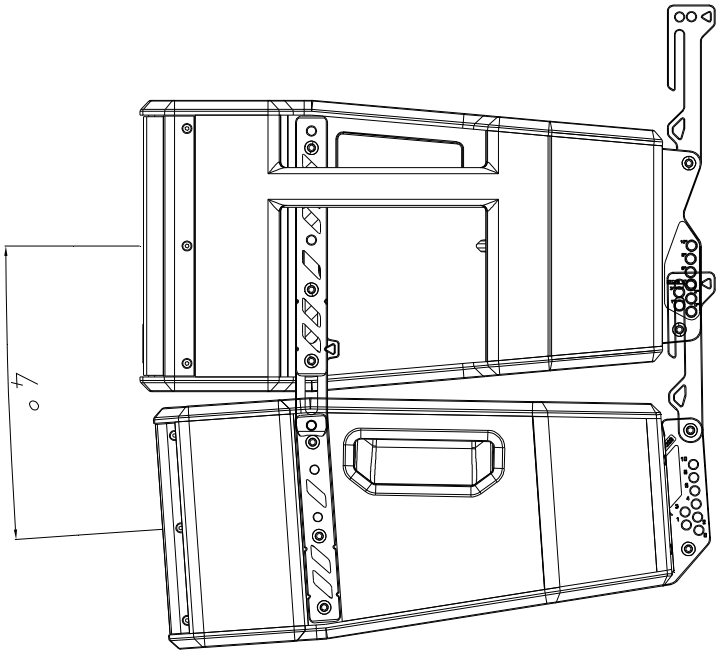

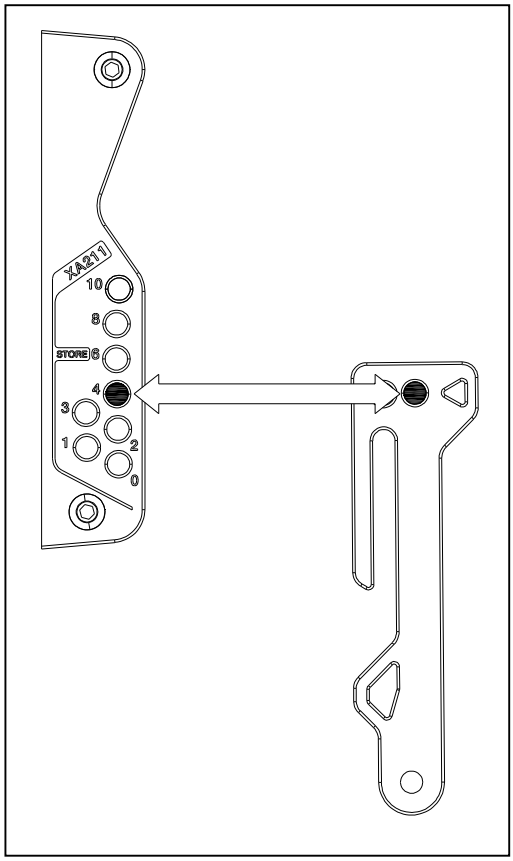

6º

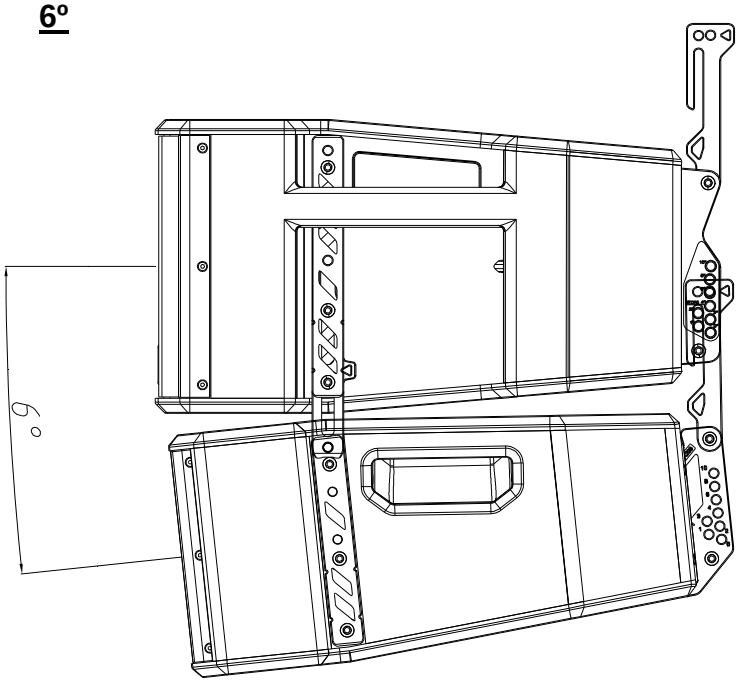

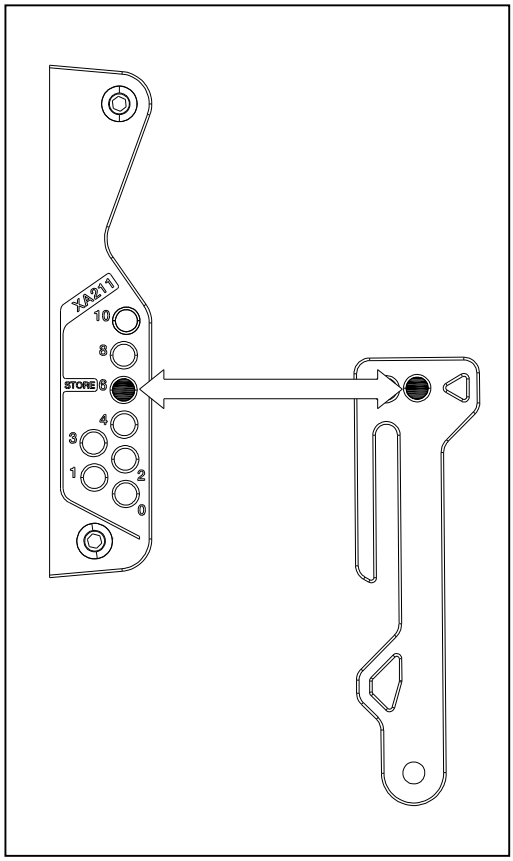

8º

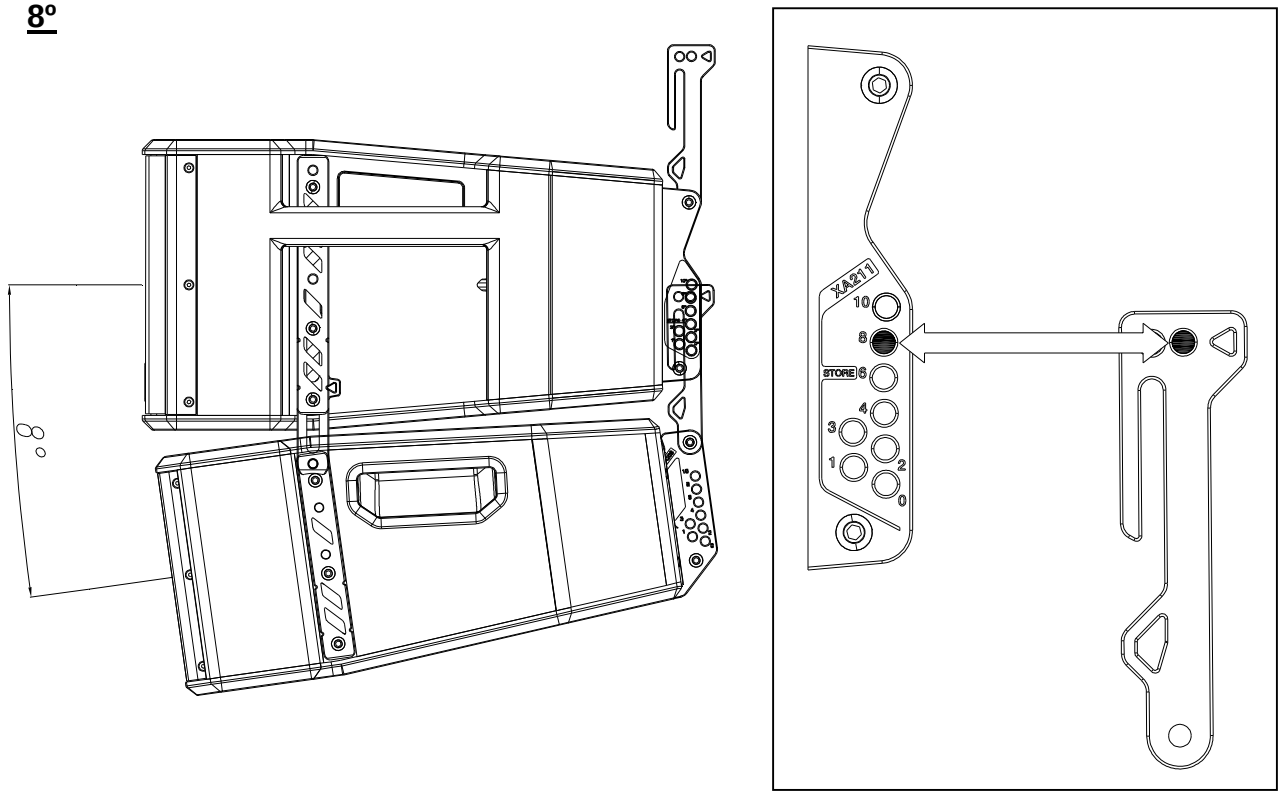

10º

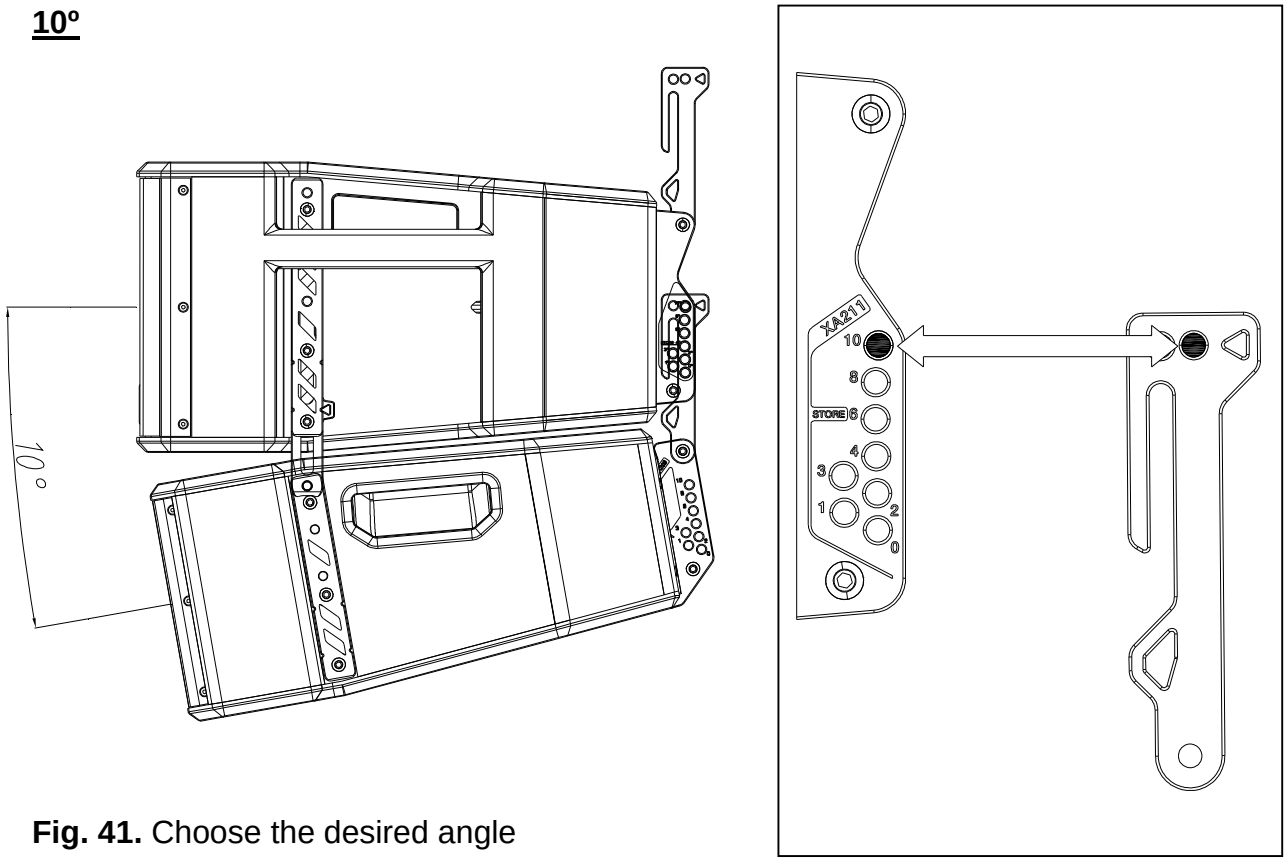

Fig. 41. Choose the desired angle

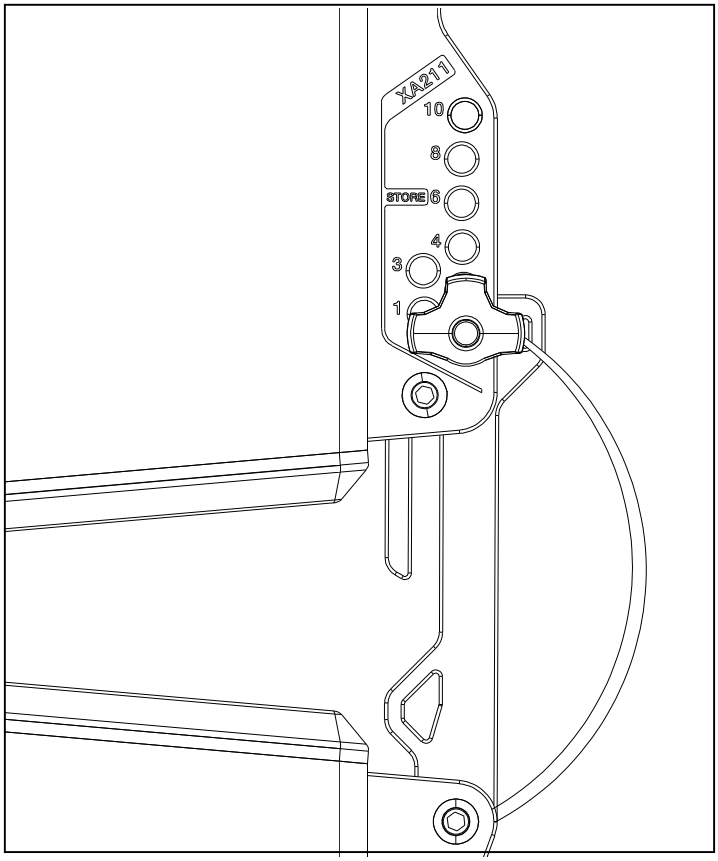

Fig. 42. Place the XA209 ball lock pin

- Proceed sequentially to add more units of the XA209.

8. MOUNTING ACCESSORIES

8.1 STAX stacking frame

The STAX is an optional accessory for stacking the XA209/XA209P onto XW118/XW218 (see the “STAX user’s manual” for more information).

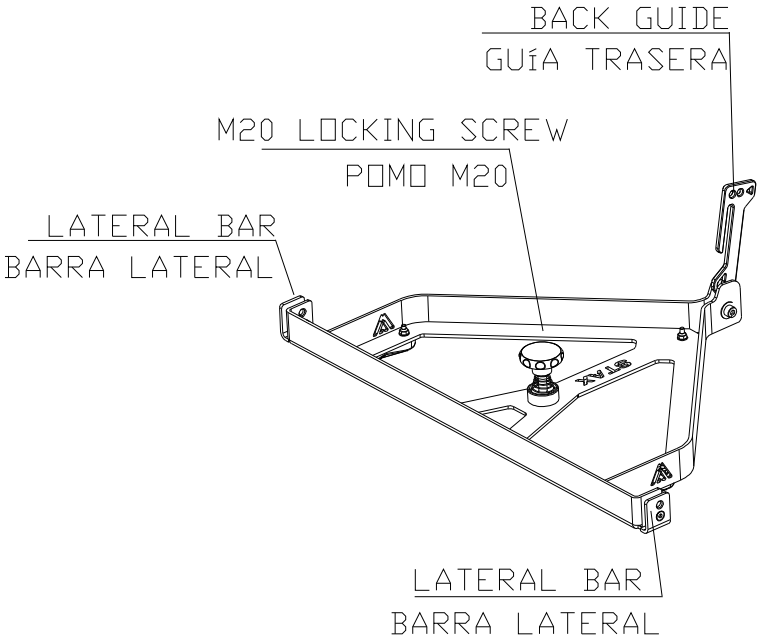

Fig.43. STAX stacking frame

9. TROUBLESHOOTING

System not powering up

- Check the Overvoltage Protection leds
  - No LED lit: Check if voltage is arriving to the PowerCon socket, and if mains cable is in good condition. If yes, the overvoltage circuit may be damaged. Contact support.
  - Red (>250V). Voltage arriving to the PowerCon socket is above 250VAC. Check the mains voltage is in the rated limits (230VAC +/-10%). If mains voltage is OK, the overvoltage circuit may be damaged. Contact support.
  - Blue (Power On): Overvoltage circuit is functioning properly. If none of the Status LEDs or the touchscreen are being lit, the fuse in the power module may be blown. The replacement of this fuse must be carried out by specialized personnel, as it is an internal component of the amplifier module.

No output sound

- Check with the indicators (Signal Present LED & Touchscreen) that the signal is being received by the system.
- Check that the signal cables are in good condition and connected at both ends
- The mixer output level must not be at minimum.
- Check that the mixer channel is not muted.
- Check that the system is not in MUTE or STANDBY (MUTE LED or STANDBY LED) not lit. If yes, go inside the menu using the touchscreen and deactivate them:
  - To disable the Standby go to SETUP and select STANDBY OFF.
  - To disable the MUTE go to AUDIO, GAIN and push the icon with a loudspeaker.
- Check that the system GAIN is not set to the minimum. To do that, go to the AUDIO setting using the touchscreen, select GAIN and move the slider to the 0dB position.

Distorted output signal

- The system is being saturated with a very high input signal, frequently caused by the same mixer. Check the output level or mixer gain channels.

Poor bass levels

- Check the polarity on the signal connections between the mixer and cabinets. If any of the Pins (1, 2 or 3) have been inverted at the cable ends, this will cause significant performance and sound quality loss.

Noise and Hum

- Check that all the connections to the active units are in good condition.
- Avoid intertwining between mains supply cables or proximity to transformers or Electromagnetic (EMI) emitting devices.
- Check there is no light intensity regulator in the same AC circuit as the unit. ALWAYS connect the sound and light circuits in different phases.
- Check that there is a proper connection to EARTH in the electrical installation.

Forgotten PIN for Touchscreen

- The default PIN is “1234”.
- Should you have changed the PIN and forgotten it, follow these steps:
  - Turn the system off.
  - Turn the system on.
  - When the display shows the word "Initializing", press anywhere on the touch screen during at least 5 seconds.
  - The PIN will be restored to its default value "1234".

10. TECHNICAL FEATURES

	XA209
Analogue Audio Input	
Sensitivity	+8dBu
Impedance	20kΩ
Audio Network Input	
Type	Dante™ Audio Networking
Channels	1 channel @ 48kHz
Mains Supply	
Type	Univ. switch mode power supply
Nominal input	85-265 VAC/45-65 Hz
Average current draw	3.3A
AD/DA converters	24 bit / 48 kHz
DSP architecture	64 bit
Frequency response (-10 dB)	70Hz-19kHz
Maximum output level (1m/continuous)	135 dB
Amplifier (program)	2500+500W
Nominal directivity (-6dB)	95º x 10º
Components	
LF-MF	2 x 8” neodymium woofers (2” long excursion dual voice coil)
HF	2 x 1.7” HT polymer diaphragm drivers
Cabinet	
Type	Bass-reflex
Height	245 mm
Width	680 mm
Depth	550 mm
Weight (net)	26,7 Kg (active) / 24 Kg (passive)
Connectors	2 x AC PowerCon (input, link)
	2 x XLR (input, link)
	2x Ethercon RJ45 for Ethernet (connection/link)
Material	Multilayer birch plywood, powder coated 1.5mm steel front grilles with acoustic grey cloth
Finish	Hi-resistance black Polyurea coating

ANNEX I.

The Amate Audio XA209 unit comes equipped with internal signal processing, featuring an adjustable DSP that can be controlled via touchscreen. The key specifications of the display are:

- TFT-LCD panel
- 320x240 resolution
- 180-degree viewing angle
- 16.7 million colours

I.1. Main screen

When we connect the system, an initial loading screen appears displaying the Amate Audio logo, the firmware version, and the processing version. Once the system is initialized, a welcome screen is shown. This screen includes the speaker model and its serial number.

When the speaker is ready to work, the main screen is displayed, it has the following elements:

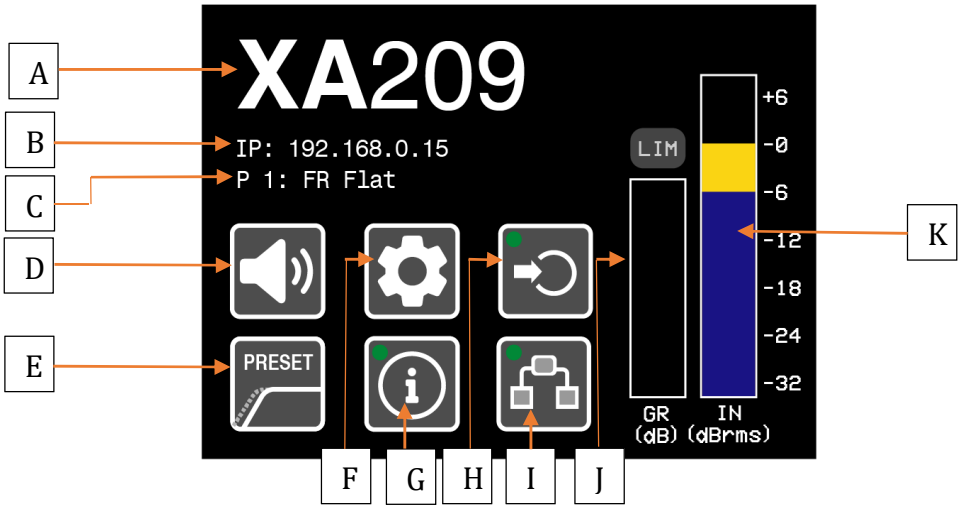

A. Speaker model
B. **IP**: IP address of the speaker.
C. **Preset**: Number and name of the active preset.
D. **Mute button**: When it is pressed, the button silences the audio output without turning off the amplifiers. This process permit return immediately to initial state when we touch again.
E. **Preset button**: Quick access to preset selection.

F. **Configuration button**: Access to the speaker's configuration. There you can configure specific adjustments. Access to this button can be protected by password. The default key is 1234.
G. **Information button**: Shows information about the active parameters of the speaker. In top-left corner, it has dynamic indicator.
    a. Green: The device is ready to use.
    b. Yellow: The device is in "Standby" mode.
    c. Red: The device is muted.
H. **Input button**: Indicates what the signal source is. Options include:
    a. Analog: for XLR input.
    b. Dante: for RJ-45 digital Dante input.
    c. Auto: Automatic selection between analogue and digital input.
I. **Network button**: Access to network configuration. In top-left corner, it has dynamic indicator.
    a. Green: The speaker is connected to the network.
    b. Yellow: The speaker is not connected to the network.
J. **Input Signal Meter**: Indicates the level of the signal input. The level is indicated in decibels relative to the sensitivity of the speaker with a headroom of 6dB. If the signals is over 0dB, a clipping indicator is shown in red.

I.2. Main MENU

With the unit unlocked and by pressing the configuration button (gear icon), we access the unit's setting screen.

A. **Audio:** Adjustment and configuration of the audio signal.
B. **Settings:** Configuration unrelated to the unit's audio.
C. **Advanced:** Advanced configuration parameters focused on technical personnel.

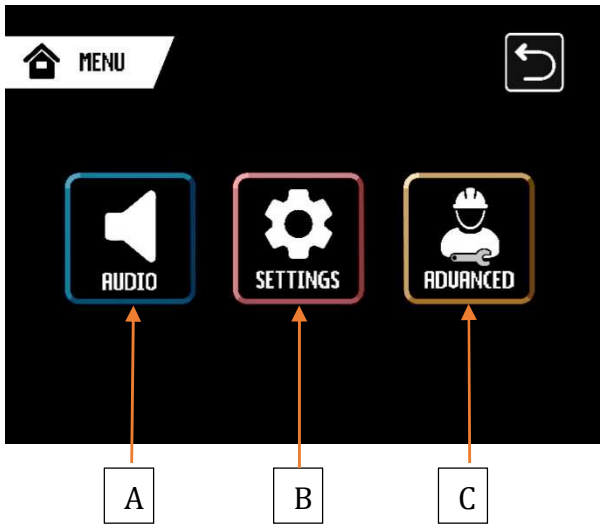

I.3. AUDIO submenu

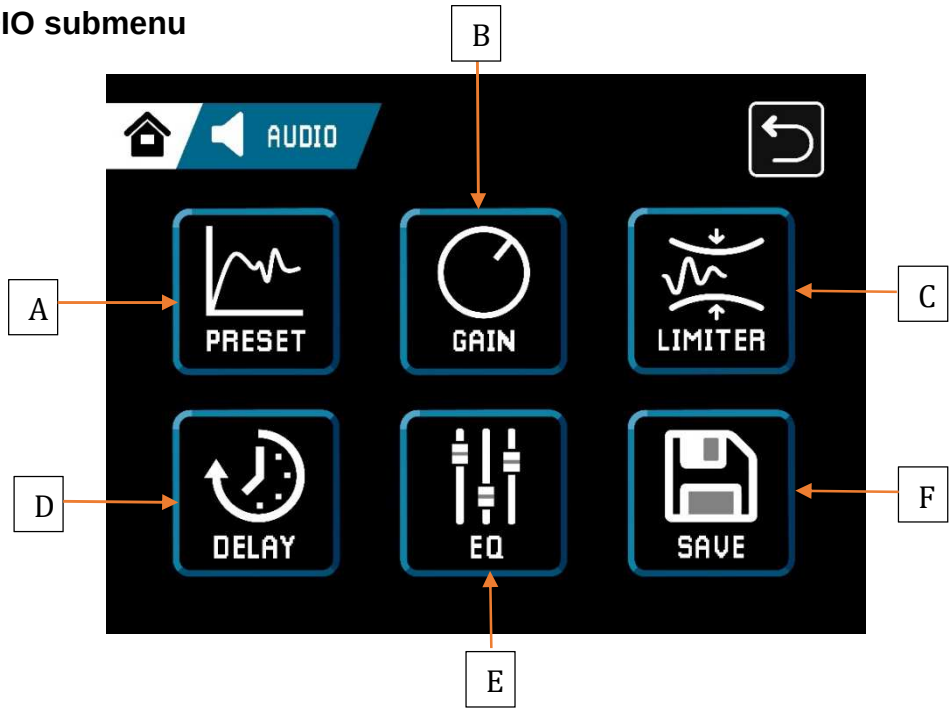

A. **Preset**: Selection of factory sound presets. The available factory presets depend on each model and can be found on each model user manual.
B. **Gain**: Control of the input gain using a fader that allows it to be adjusted to the needs of the application. The system can also be muted using the button with the speaker icon.
C. **Limiter**: Setting the threshold of the integrated limiter. The threshold indicates the level of input signal at which the limiter will start to act. The limitation indicator shows the behaviour of the limiter in real time, displaying the current gain reduction (GR: Gain Reduction).
D. **Delay**: Adjustment of the delay of the input signal. It can be configured in milliseconds or meters, showing the equivalence between the two. The polarity of the input signal can also be configured.
E. **Save**: Access to the unit's internal memories. Allows creating a new user preset with the current configuration of the equalizer, delay, gain, and limiter. There are up to a maximum of 24 memories available.

I.4. SETTINGS menu

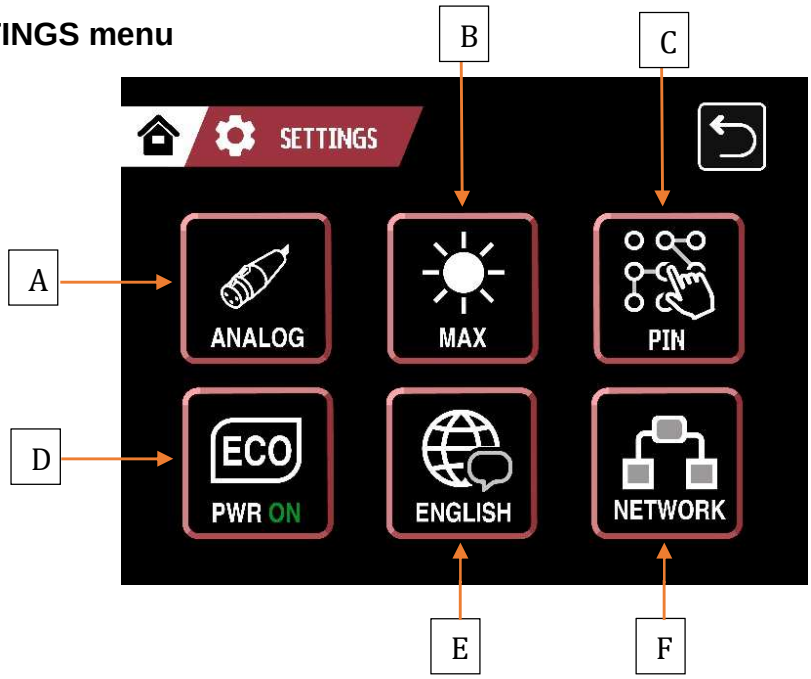

A. **Input Selection**: Allows us to choose which input the internal processor will use. The options are ANALOG, DANTE, or AUTO. In AUTO mode, the unit automatically chooses the audio source. In case of conflict (simultaneous use of XLR and Dante connectors), the unit prioritizes the Dante digital signal. If the Dante signal becomes unavailable at any point, the unit automatically switches to the analogue input.
B. **Screen Brightness:** Three levels of brightness can be selected: MAX (Maximum), MED (Medium), and MIN (Minimum).
C. **PIN Lock:** Allows setting up a lock on the unit via a PIN code. With PIN lock configured and activated, a locked padlock icon is displayed on the main screen. To unlock the unit, it is necessary to press on the padlock and enter the unlock code.
D. **ECO Button:** Configures the behaviour of the unit's internal amplification stages.
    a. PWR ON: The amplification system is operational and ready for immediate delivery of amplified signal.
    b. STANDBY: The amplifiers enter a resting state, thus they will not emit a signal even if the unit is powered on.
    c. AUTO: The amplifiers remain in rest until an input signal is detected, at which point they become operational.
E. **Language Selection:** Allows selecting the language of the interface. The options are SPANISH, CATALAN, and ENGLISH.
F. **Network Button**: Allows configuring the IP address and network mask of the speaker.

I.5. ADVANCED menu

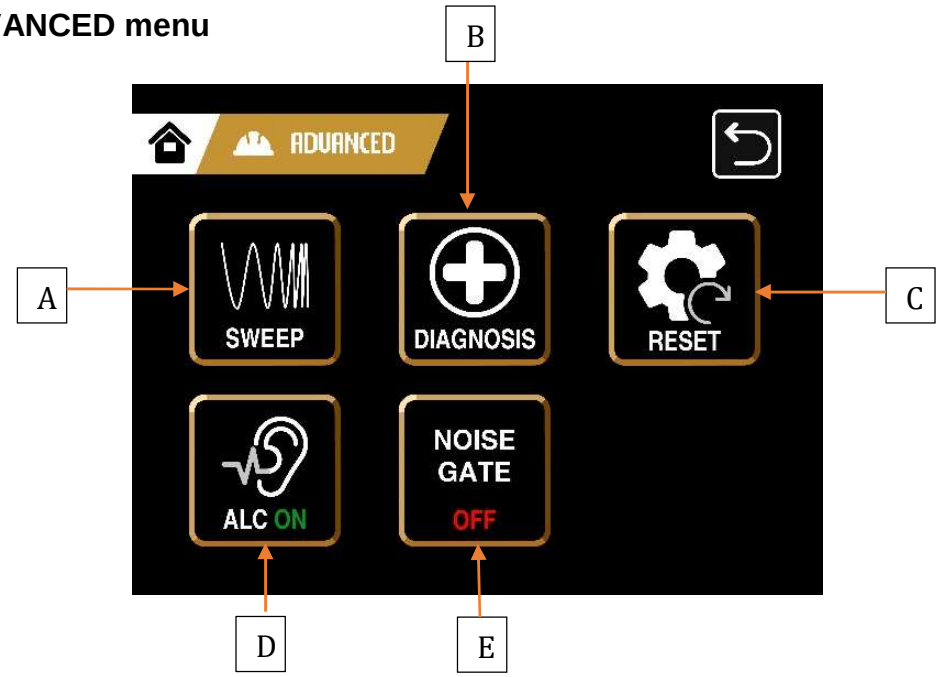

A. **Sweep:** Acoustic diagnostic of the unit. A sinusoidal wave is emitted that sweeps through the entire audible A sweep will be performed for each loudspeaker way. The duration of each sweep is approximately two seconds.
B. **Diagnosis:** Access to the system information menu. In this menu, we can find information regarding the use of the speaker and data on the current, temperature, and the status of the device.
C. **Reset**: Resets all the parameters. A pattern is requested as confirmation for the process. Once done, all parameters and settings revert to factory defaults.
D. **ALC: (available in selected models only)** Allows activating or deactivating the Automatic Loudness Compensation algorithm. This algorithm is based on psychoacoustic studies, which show that the ear loses sensitivity to low and high frequencies as the volume increases. The algorithm compensates for this nonlinear behaviour of the ear, enhancing the presence of low and high frequencies as the signal level decreases. Its use is not recommended for live sound applications. It is ideal for fixed installations or background music systems.
E. **Noise Gate: (available in selected models only)** Allows activating or deactivating the noise gate. This dynamic processor is used to eliminate possible noises produced by the electroacoustic components of the speaker when it is not reproducing sound.

amate audio
Great sound from Barcelona since 1972

DECLARATION OF CONFORMITY

In accordance with EN 45014:1998

Manufacturer's Name:	"AMATE AUDIO S.L."
Manufacturer's Address:	C/ Perpinyà 25, Polígon Industrial Nord 08226 Terrassa, (Barcelona), SPAIN
Brand:	"AMATE AUDIO"

We declare under our own responsibility that:

Product:	Active speaker systems with DSP. Audio apparatus for professional use
Name:	Xcellence XA209

Conforms to the following product specifications:

Safety:	IEC 60065-01 + A1
EMC:	EN 55022:2006 EN 55103-1:2009 EN 55103-2 2009 FCC Part 15

WARNING:

In accordance to EN55022, this is a class A product. In a domestic environment this product may cause radio interference in which case the user may be required to take adequate measures.

Supplementary Information
The product herewith complies with the requirements of the:

Low Voltage Directive 2006/95/EC
EMC Directive 2004/108/EC
RoHS Directive 2002/95/EC
WEEE Directive 2002/96/EC

With regard to Directive 2005/32/EC and EC Regulation 1275/2008 of 17 December 2008, this product is designed, produced, and classified as Professional Audio Equipment and thus is exempt from this Directive.

Date of issue: September 1rst., 2025

Signature:

AMATE AUDIO S.L.
N.I.F: B59103481
Violinista Vellsolà, 18
Tel: +34 93 736 23 90
08222 - Terrassa
Barcelona – SPAIN

Joan A. Amate
General Manager

Conformity Marking

Great sound
from Barcelona
since 1972

XCELLENCE speaker systems have been designed, engineered and manufactured in Barcelona – SPAIN by

Los **sistemas acústicos XCELLENCE** han sido diseñados y fabricados en Barcelona – ESPAÑA por

Amate Audio S.L.
Perpinyà, 25 · Polígon Industrial Nord · 08226 Terrassa
T. +34 93 735 65 65 – info@amateaudio.com

R&D and FACTORY:
Violinista Vellsolà, 18 · 08222 Terrassa

Barcelona – SPAIN

www.amateaudio.com

© Copyright 2026 by Amate Audio S.L.